Daystar Form DS-IOM-14
900040

STAINLESS STEEL

DS SYSTEMS

GAS-FIRED LOW-INTENSITY INFRA-RED RADIANT TUBE HEATERS

FOR EITHER INDOOR OR OUTDOOR INSTALLATION

INSTALLATION, OPERATION, & MAINTENANCE INSTRUCTIONS

! WARNING !

Improper installation, adjustment, alteration, service or maintenance can cause property damage, injury or death. Read the installation, operating, and maintenance instructions thoroughly before installing or servicing this equipment.

FOR YOUR SAFETY

- If you smell gas: open windows; don't touch electrical switches, extinguish any open flames; evacuate the structure; call your gas supplier immediately.

WARNING – NOT FOR RESIDENTIAL USE

- Failure to comply with instructions could result in unsafe operation, property damage, personal injury, and/or death. A gas-fired appliance could expose you to substances in fuel or from fuel combustion, which have been determined by the State of California to cause cancer, birth defects or other reproductive harm. For industrial or commercial use only.
- Retain these instructions for future reference. Contact factory for further information.

IMPORTANT

- Have a qualified electrician check the electrical supply circuit and wall receptacle are properly grounded and the electrical supply polarity is correct. The heater control is polarity sensitive and **will not operate** properly if the electrical supply is not wired correctly.

HAZARD INTENSITY LEVELS

- **DANGER**: Failure to comply will result in severe personal injury or death and property damage.
- **WARNING**: Failure to comply could result in severe personal injury or death and/or property damage.
- **CAUTION**: Failure to comply could result in minor personal injury and/or property damage.

WARNINGS

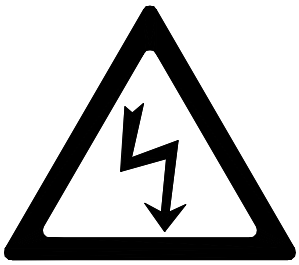

- Protect yourself and others by observing all safety information.

WARNING

FIRE OR EXPLOSION HAZARD

Can cause property damage, severe injury or death.

- Read manual carefully before installing, or servicing this equipment, or serious injury or death may result.
- Check minimum clearance to combustibles to make certain that heater is in a safe location. Combustible items located too close to the heater could cause a **serious fire hazard**. In storage areas, signs for maximum permissible stacking height to maintain clearance from the heater to combustible materials must be posted adjacent to the heater thermostats or in the absence of such thermostats in a conspicuous location.
- Operating these heaters in an atmosphere containing combustible dust or flammable vapors is dangerous and may potentially result in injury or death.
- Heaters must be oriented in such a way as to maintain minimum clearances to vehicles parked underneath them.
- These heaters expand and contract with each cycle. The installation of the gas connection and mounting hardware must accommodate this movement; otherwise, a fire or explosion hazard may occur.
- These heaters are equipped with an automatic ignition and does not contain a pilot. **DO NOT** attempt to light the burner manually, this could result in serious personal injury or fire hazard.

CAUTION

MECHANICAL HAZARD

- **DO NOT** use high pressure to test the gas pipes with the burner still attached. This will cause damage to the controls within the burner requiring them to be replaced.
- If heater is being operated in an atmosphere with a negative pressure or an atmosphere containing contaminants, an outside combustion air supply is required. Failure to provide outside combustion air may allow excessive heat to back up to the blower wheel and bearings severely shortening service life.
- Correct inlet pressure is important to efficiency and long lasting operation of the burner.
- The burner, tubing, and accessories expand and contract with each cycle. The system must be installed so that the mounting hardware and gas line will accommodate these changes.
- All models of these tube heaters include a turbulator, which **must** be located inside the **<u>last</u>** 10-foot (3.0 m) tube. [Note: 15-foot (4.6 m) models have the 10-foot (3.0 m) tube with turbulator before the 5-foot (1.5 m) tube.]
- Before servicing the burner or removing the cover panel, all electrical and gas supplies must be disconnected.
- Give consideration to construction such as partitions, storage racks, hoists, etc., and their relation to the installation of the heater.
- These heaters must be installed and serviced **ONLY** by trained and qualified gas installation and service personnel.

IMPORTANT

- Failure to follow these instructions may result in property damage, injury or death.
- These heaters **<u>cannot</u>** be used in the following environments: explosion-proof or residential living/sleeping quarters.
- These heaters **<u>may or may not</u>** be used in the following environments: enclosed swimming pool, process heating, or contaminated atmosphere applications.
- **Contact factory if in any doubt.**

TABLE OF CONTENTS

- This instruction manual may not cover all details or variations in this equipment, or cover every possible situation to be met in connection with installation, operation, or maintenance. Should problems arise that are not covered sufficiently in these instructions, the purchaser is advised to contact the factory's engineering department for further information.

GENERAL INFORMATION AND INSTALLATION CODES

ATTENTION

Mount a copy of these instructions adjacent to heater and retain a copy for future reference.

These heaters MUST be installed and serviced ONLY by trained and qualified gas installation and service personnel. The installing contractor must be familiar with all the various requirements and is responsible for installing each heater in compliance with these instructions and all applicable codes of all authorities having jurisdiction, local, state, provincial and national.

GENERAL INFORMATION

These heaters are CSA International Design Certified and manufactured for either indoor or outdoor installation in compliance with American National Standard for Gas-Fired Low-Intensity Infrared Heaters ANSI Z83.20/CSA 2.34-latest edition. An Outdoor Kit is required for outdoor use. If you have any questions call factory before attempting installation. These heaters are approved for commercial and industrial installation only.

A limited number of excerpts from various standards and codes are outlined in the following instructions.

UL LISTING

These heaters are design certified by CSA International for compliance with ANSI Standard Z83.20-latest edition. CSA International is the appropriate agency as they specialize in gas appliances while Underwriters Laboratories (UL) specialize in electric appliances. If UL were to design certify the heaters, it would be to the same ANSI Standard. Certification by UL is not required, as it would be redundant.

LOCAL APPROVALS

These heaters have local approvals by such governing bodies as: New York City (A Series: MEA 232-95-E Vol. 2; B and C Series MEA 417-86-E Vol. 5; MB Series MEA 233-95-E Vol. 2; MC Series 233-95-E Vol. 2); City of Minneapolis, Minnesota (#05444); the Commonwealth of Massachusetts; and the State of Nebraska.

INSTALLATION CODES

All installations must be in accordance with local codes and the National Fuel Gas Code, ANSI Z223.1 / NFPA 54-latest edition. In locations used for the storage of combustible materials, signs shall be posted to specify the maximum permissible stacking height to maintain required clearances from the heater to the combustibles. Where unvented infrared heaters are used, natural or mechanical means shall be provided to supply and exhaust [combustion and ventilation air at a rate of] at least [4 CFM per 1000 BTUH] 4 ft^3/min/1000 Btu/hr *(0.38m^3/min/kW)* input of installed heaters. Exhaust openings for removing flue products shall be above the level of the heaters.

The heater, when installed, must be electrically grounded in accordance with the National Electric Code, ANSI/NFPA 70-latest edition. All electrical work must conform to the National Electrical Code ANSI / NFPA 70-latest edition. The installation must meet the requirements of the Occupational Safety and Health Act (OSHA) which requires OSHA approved service and safety access to the systems after they are installed.

AIRCRAFT HANGARS

These overhead heaters are suitable for use in aircraft hangars when installed in accordance with the Standard on Aircraft Hangars, ANSI / NFPA 409-latest edition, and are so marked. In aircraft storage and service areas, heaters shall be installed at least 3 m (10 ft) above the upper surface of wings or of the engine enclosures of the highest aircraft that might be housed in the hangar. The measurement shall be made from the wing or engine enclosure, whichever is higher from the floor, to the bottom of the heater. In shops, offices, and other sections of aircraft hangars communicating with aircraft storage or servicing areas, the bottom of the heaters shall be installed not less than 2.4 m (8 ft) above the floor. In all hangars, suspended or elevated heaters shall be located in spaces where they shall not be subject to injury by aircraft, cranes, movable scaffolding, or other objects. Provisions shall be made to ensure accessibility to suspended heaters for recurrent maintenance purposes.

REPAIR GARAGES

These overhead heaters are suitable for use in repair garages when installed in accordance with the Code for Motor Fuel Dispensing Facilities and Repair Garages, NFPA 30A-latest edition (formerly the Standard for Repair Garages NFPA 88B) and are so marked. Heat-producing appliances using gas fuel listed for use in garages shall be permitted to be installed in lubrication rooms, service rooms, or fuel dispensing areas where Class I liquids are dispensed or transferred, provided the equipment is installed at least 2.4 m (8 ft) above the floor.

! WARNING !

An overhead heater should be installed so that the minimum clearances marked on the heater will be maintained from vehicles parked below the heater. (ANSI Z83.20, section 1.26.3.d.)

PARKING STRUCTURES

These overhead heaters are suitable for use in parking structures when installed in accordance with the Standard for Parking Structures, NFPA 88A-latest edition, and are so marked. Unless otherwise permitted … all flames associated with heating equipment shall be located a minimum of 500 mm (18 in.) below the floor-ceiling assembly or 500 mm (18 in.) above the floor.

MATERIAL SAFETY DATA SHEETS (MSDS)

These heaters comply with the US Superfund Amendments and Reauthorization ACT (SARA) Title III. No Material Safety Data Sheets are required.

GAS/RATING CONVERSION OF INSTALLED HEATER

Conversions of gas type and BTUH ratings are possible. Identify model and serial numbers from the serial plate located on the exterior of the burner. Identify the length of radiant tubing. Review the BASIC SYSTEM CONFIGURATIONS section to determine if system components in addition to burner parts are needed to convert the heater. Contact the factory for approved parts and instructions.

CANADIAN CODES

- The information on this page applies specifically to installations in Canada.

INSTALLATION CODES

- These infrared heaters are CSA International Design Certified and manufactured for either indoor or outdoor installation in compliance with the Standard for Gas-Fired Low-Intensity Infrared Heaters CSA 2.34-latest edition. If you have any questions call factory before attempting installation. These heaters are certified for unvented or vented use.
- The installation must conform with local building codes or, in the absence of local codes, with the current Canadian Natural Gas and Propane Installation Code, CAN/CSA B149.1. Canadian authorities having jurisdiction should be consulted, before installations are made, to verify applicable local codes and installation procedures.
- An infrared heater shall be protected against physical damage.
- An unvented infrared heater shall not be installed in any location where a flammable vapour, combustible dust or fibres, or an explosive mixture is present.
- An unvented infrared heater shall not be installed in a residential or care or detention occupancy building.
- An unvented infrared heater shall be provided with mechanical ventilation for combustion and ventilation air
  - (1) that is so located that products of combustion from each heater are effectively removed outdoors;
  - (2) that has a ventilation volume of at least [3 CFM per 1000 BTUH] 300 cfm *(142 dm^3/s)* for each 100 000 Btuh *(30 kW)* input or fraction there of; and
  - (3) is sufficient to maintain the level of carbon dioxide at less than 5000 ppm measured 6 ft *(2m)* above the work area.
- An unvented heater shall have the ventilation system so interlocked that any reduction of the volume of airflow required in the above note for a heater or group of heaters will cause the shutdown of that heater or group of heaters.
- An unvented infrared heater shall not be installed in an exit passageway or stairway within 8 ft *(2.5 m)* measured horizontally from an exit door.
- An infrared heater shall be provided with clearance from combustible materials as certified and indicated on the heater.
- A vented infrared heater shall be installed in accordance with the certified markings and the manufacturer's certified installation instructions.
- A tube-type infrared heater shall only be connected with a Type I hose connector that is (1) certified as being in compliance with CSA Standard CAN/CGA-8.1; and (2) of a length of 36 +/- 6 in *(90 +/- 15 cm)*.
- If an external electrical source is utilized, the heater, when installed, must be electrically grounded in accordance with the current Canadian Electric Code, CAN/CSA C22.1.
- The electrical connection shall comply with the local codes or, in the absence of local codes, with the current Canadian Electrical Code, CAN/CSA C22.1, Part I and Part II, and Electrical Features of Fuel Burning Equipment, CAN/CSA C22.2 No. 3.
- Vent terminal clearances shall be in accordance with the current Canadian Natural Gas and Propane Installation Code, CAN/CSA B149.1. A horizontal vent shall not terminate less than 6 feet *(1.8 m)* from a combustion air inlet or another appliance, 3 feet *(900 mm)* from any other building opening or any gas service regulator, or 7 feet *(2.1 m)* above grade and shall not terminate directly above a gas utility meter or gas service regulator.
- Manual shut-off valves shall be used as specified in the current Canadian Natural Gas and Propane Installation Code, CAN/CSA B149.1. A manual shut-off valve shall be of the plug, ball, or eccentric type and it shall not be subjected to either a temperature or a pressure greater than its certified rating. A readily accessible manual shut-off valve shall be installed to control the supply of gas to each appliance and the valve shall be located, in either the drop or riser, as close as possible to the valve train of a commercial and industrial type appliance.

AIRCRAFT HANGARS

- These overhead heaters are suitable for use in aircraft hangars when installed in accordance with the current Canadian Natural Gas and Propane Installation Code, CAN/CSA B149.1.
- A heater located in an aircraft storage or servicing area shall be installed so that no portion of an aircraft that can occupy the area that is within the clearance to combustible material, as marked on the heater rating plate.
- When an infrared heater is installed in either a repair or shop area that communicates with an aircraft hangar, the minimum clearance from the floor to the infrared heater shall be 8 ft *(2.4m)*.
- An infrared heater shall not be located in an area of an aircraft hangar where it can be subjected to physical damage by aircraft, cranes, movable scaffolding, or other objects.

GARAGES

- These overhead heaters are suitable for use in garages when installed in accordance with the current Canadian Natural Gas and Propane Installation Code, CAN/CSA B149.1.
- The minimum clearance from the radiant face of the infrared heater to the upper surface of the highest vehicle shall not be less than the certified clearance from combustible material as indicated on the heater [installed in a garage or a car wash]. Provision shall be made to maintain these minimum specified clearances by an interlock that shuts off the gas supply until the required clearances have been re-established, a protective bar, or a device that provides a warning when the clearances are not being maintained.
- Where an infrared heater is installed in a garage and the clearance from combustible material cannot be maintained when the vehicle is raised on a hoist, an electrical interlock shall be provided to shut off the burner and prevent its operation until the required clearance has been re-established.

⚠ WARNING ⚠

- **An overhead heater should be installed so that the minimum clearances marked on the heater will be maintained from vehicles parked below the heater. (CSA 2.34, section 1.26.3.d.)**

CLEARANCE TO COMBUSTIBLES*

CLEARANCES FOR ALL HEATERS*
inches (cm)

TOP OF REFLECTOR
12 (31)

END OF BURNER
12 (31)

END OF U-BEND
68 (173)

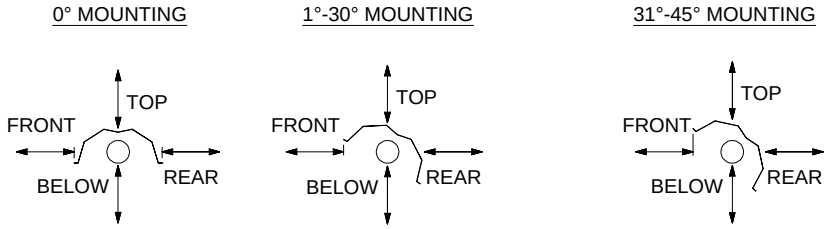

- Reflector width = 15.75” (40cm)
- Top, Front, and Rear clearances are measured from reflector.
- Below clearance is measured from bottom of tube.
- Clearance to combustibles* measurements are given in inches (cm).

SERIES	MBTUH (kW)	0° TO 30° REFLECTOR ANGLE			31° TO 45° REFLECTOR ANGLE		
		FRONT	REAR	BELOW	FRONT	REAR	BELOW
A	40 (12) 45 (13) 50 (15)	40 (102)	40 (102)	40 (102)	40 (102)	12 (31)	40 (102)
	55 (16) 60 (18)	50 (127)	50 (127)	50 (127)	50 (127)	12 (31)	50 (127)
MB B	65 (19) 70 (21) 75 (22) 80 (23) 85 (25)	24 (61)	24 (61)	60 (152)	na	na	na
B	90 (26) 95 (28) 100 (29)	24 (61)	24 (61)	60 (152)	na	na	na
B MC	105 (31) 110 (32) 115 (34) 120 (35)	32 (82)	32 (82)	72 (183)	na	na	na
B / MC / C	125 (37)						
MC / C	130 (38)	48 (122)	48 (122)	82 (209)	70 (189)	12 (31)	82 (209)
C	135 (40) 140 (41) 145 (42) 150 (44)						
	155 (45) 160 (47) 165 (48) 170 (50) 175 (51)	58 (148)	58 (148)	92 (234)	80 (203)	12 (31)	92 (234)
	180 (53) 185 (54) 190 (56) 195 (57) 200 (59)	68 (173)	68 (173)	102 (259)	90 (229)	12 (31)	102 (259)

- ***MINIMUM CLEARANCES** specified in these tables must be maintained to combustible and other materials which may be damaged by temperatures 90°F above (50°C above) ambient room temperature. These clearances to combustibles are specified on each heater’s serial plate. In locations used for the storage of combustible materials, signs must be posted to specify the maximum permissible stacking height to maintain required clearances from the heater to the combustibles. (ANSI Z223.1/NFPA 54) Gas and electrical supply lines shall not be located within the minimum clearances to combustibles. na = not applicable.
- Carefully examine materials surrounding the heater. Materials, such as plastic, having low service temperature ratings can be discolored or damaged. It is the installer’s responsibility to ensure that building materials with a low heat tolerance, which may degrade at lower temperatures, are protected to prevent degradation.
- Fire sprinkler heads must be located at an appropriate distance from the heater. This distance may exceed the published clearance to combustibles. Certain applications will require the use of high temperature sprinkler heads or relocation of the heaters. Sprinkler systems containing propylene glycol or other flammable substances are not to be used in conjunction with this heater without careful consideration for and avoidance of potential fire or explosion hazards. For further information consult NFPA 13. Always observe applicable state and local codes.

MOUNTING CONSIDERATIONS

- **Clearance to combustible materials must be maintained.**
- Mounting heights lower than the recommended **Minimum Height** may be used if personnel are not kept directly under heater.
- The **Distance From Wall** measurement provides the most effective heat dispersion balance between the floors and walls.
- There is practically no limitation on a maximum mounting height, however, the higher the heater is mounted the less radiant heat is felt at the floor directly below the heater.
- By design, a straight infrared radiant tube heater will produce more heat at the burner end than at the exhaust end. Locate the burner end where more heat is desired.

Reflector:	**Standard**				**Parabolic**				**Standard & Parabolic**
Mounting Angle:	**Horizontal**	**30º - 45º**	**Horizontal**	**30º - 45º**	**Horizontal**	**30º - 45º**	**Horizontal**	**30º - 45º**	**Horizontal & 30º - 45º**
Input MBTUH (kW)	**Minimum Height feet (m)**		**Distance From Wall feet (m)**		**Minimum Height feet (m)**		**Distance From Wall feet (m)**		**Max. Distance Between Rows feet (m)**
40 (12)	9.5 (2.9)	7.5 (2.3)	6 (1.8)	1 (0.3)	11.5 (3.5)	9.5 (2.9)	4 (1.2)	1 (0.3)	80 (24.4)
45-50 (13-15)	10.0 (3.0)	8.0 (2.4)	6 (1.8)	1 (0.3)	12.0 (3.7)	10.0 (3.0)	4 (1.2)	1 (0.3)	80 (24.4)
55-60 (16-18)	10.5 (3.2)	8.5 (2.6)	6 (1.8)	1 (0.3)	12.5 (3.8)	10.5 (3.2)	4 (1.2)	1 (0.3)	80 (24.4)
65-75 (19-22)	11.0 (3.4)	9.0 (2.7)	8 (2.4)	1 (0.3)	13.0 (4.0)	11.0 (3.4)	6 (1.8)	1 (0.3)	80 (24.4)
80-85 (23-25)	11.5 (3.5)	9.5 (2.9)	8 (2.4)	1 (0.3)	13.5 (4.1)	11.5 (3.5)	6 (1.8)	1 (0.3)	90 (27.4)
90-95 (26-28)	12.0 (3.7)	10.0 (3.0)	8 (2.4)	1 (0.3)	14.0 (4.3)	12.0 (3.7)	6 (1.8)	1 (0.3)	95 (29.0)
100-105 (29-31)	12.5 (3.8)	10.5 (3.2)	8 (2.4)	1 (0.3)	14.5 (4.4)	12.5 (3.8)	6 (1.8)	1 (0.3)	95 (29.0)
110-115 (32-34)	13.0 (4.1)	11.0 (3.4)	12 (3.7)	1 (0.3)	15.0 (4.6)	13.0 (4.1)	9 (2.7)	1 (0.3)	100 (30.5)
120 (35)	13.5 (4.1)	11.5 (3.5)	12 (3.7)	1 (0.3)	15.5 (4.7)	13.5 (4.1)	9 (2.7)	1 (0.3)	100 (30.5)
125 (37)	14.0 (4.3)	12.0 (3.7)	12 (3.7)	1 (0.3)	16.0 (4.9)	14.0 (4.3)	9 (2.7)	1 (0.3)	105 (32.0)
130 (38)	14.5 (4.4)	12.5 (3.8)	12 (3.7)	1 (0.3)	16.5 (5.0)	14.5 (4.4)	9 (2.7)	1 (0.3)	105 (32.0)
135-140 (40-41)	15.0 (4.6)	13.0 (4.0)	12 (3.7)	1 (0.3)	17.0 (5.2)	15.0 (4.6)	9 (2.7)	1 (0.3)	105 (32.0)
145 (42)	15.5 (4.7)	13.5 (4.1)	12 (3.7)	1 (0.3)	17.5 (5.3)	15.5 (4.7)	9 (2.7)	1 (0.3)	105 (32.0)
150 (44)	16.0 (4.9)	14.0 (4.3)	12 (3.7)	1 (0.3)	18.0 (5.5)	16.0 (4.9)	9 (2.7)	1 (0.3)	105 (32.0)
155-160 (45-47)	16.5 (5.0)	14.5 (4.4)	13 (4.0)	1 (0.3)	18.5 (5.6)	16.5 (5.0)	10 (3.0)	1 (0.3)	105 (32.0)
165-170 (48-50)	17.0 (5.2)	15.0 (4.6)	13 (4.0)	1 (0.3)	19.0 (5.8)	17.0 (5.2)	10 (3.0)	1 (0.3)	110 (33.5)
175-180 (51-53)	17.5 (5.3)	15.5 (4.7)	14 (4.3)	1 (0.3)	19.5 (5.9)	17.5 (5.3)	11 (3.4)	1 (0.3)	110 (33.5)
185-190 (54-56)	18.0 (5.5)	16.0 (4.9)	14 (4.3)	1 (0.3)	20.0 (6.1)	18.0 (5.5)	11 (3.4)	1 (0.3)	115 (35.1)
195-200 (57-59)	18.5 (5.6)	16.5 (5.0)	15 (4.6)	1 (0.3)	20.5 (6.2)	18.5 (5.6)	12 (3.7)	1 (0.3)	115 (35.1)

HIGH ALTITUDE

- High altitude is any altitude greater than 2000 feet (610 m) above sea level.
- These heaters are manufactured for use at the specific altitude range stated on the heater serial plate. Do not install heater if it is not rated for the correct altitude. Contact factory if in doubt.

OVERVIEW DRAWINGS (1 OF 2)

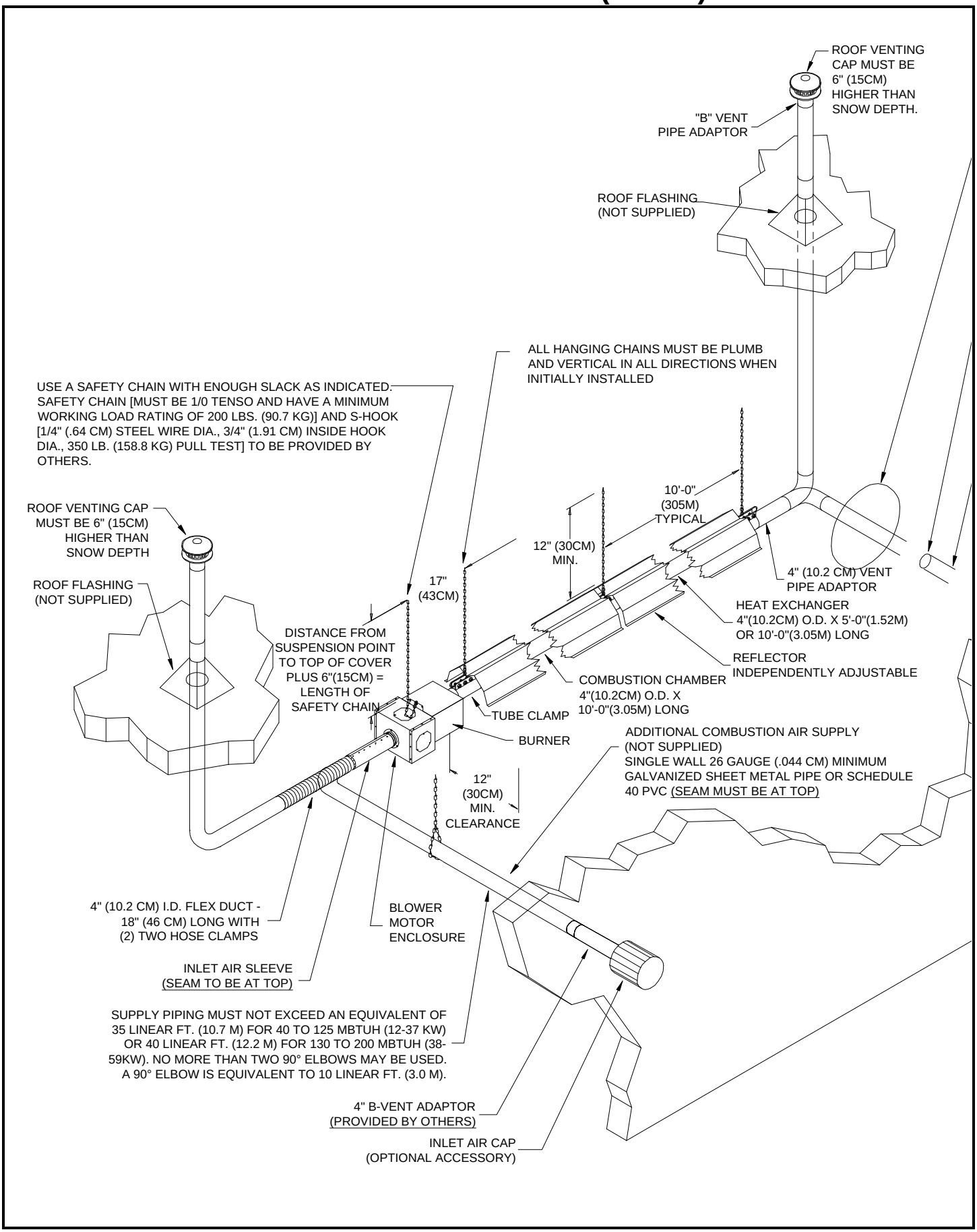

OVERVIEW DRAWINGS (2 OF 2)

MAINTAIN 18 INCH (46 CM) MINIMUM CLEARANCE TO COMBUSTIBLES FOR ENTIRE LENGTH OF PIPING

FOR ALL INDOOR JOINTS, USE RTV SEALANT TO PREVENT HOT FLUE GAS LEAKAGE INTO THE BUILDING (USE A SHEET METAL PIPE AND CRIMPER FOR JOINING IDENTICAL SIZE SHEET METAL PIPES) USE THREE (3) #6 SHEET METAL SCREWS (SMS) PER VENT PIPE JOINT. THE VENT PIPE SEAM SHOULD BE ON TOP WITH ONE SMS ON TOP AND ONE SMS 120 DEGREES FROM THE TOP ON EACH SIDE.

ADDITIONAL EXHAUST VENT PIPING (NOT SUPPLIED) 4" (10.2CM) I.D. SINGLE WALL 26 GAUGE (.044 CM) MINIMUM GALVANIZED SHEET METAL PIPE (SEAM TO BE AT TOP) (OR OTHER FACTORY-APPROVED MATERIALS) VENT PIPING MUST NOT EXCEED AN EQUIVALENT OF 35 LINEAR FT. (10.7 M) FOR 40 TO 125 MBTUH (12-37 KW) OR 40 LINEAR FT. (12.2 M) FOR 130 TO 200 MBTUH (38-59 KW). NO MORE THAN 2 ELBOWS MAY BE USED. A 90° ELBOW IS EQUIVALENT TO 10 LINEAR FT. (3.0 M). A 45° ELBOW IS EQUIVALENT TO 5 LINEAR FT. (1.5 M).

ADD NON-COMBUSTIBLE SUPPORT (NOT SUPPLIED) EVERY 5 OR 6 FEET (1.5 OR 1.8 M) APART AND ADEQUATE FOR THE PIPING WEIGHT.

FOR COMBUSTIBLE WALLS ONLY USE A 2" (5.1 CM) CLEARANCE NON-COMBUSTIBLE VENTILATING METAL THIMBLE (NOT SUPPLIED)

FOR NON-COMBUSTIBLE WALLS ONLY 4.250" (10.8 CM) DIA. HOLE FOR 4" (10.2 CM) O.D. PIPE ADD NON-COMBUSTIBLE PROTECTION AROUND THE HOLE IF NECESSARY

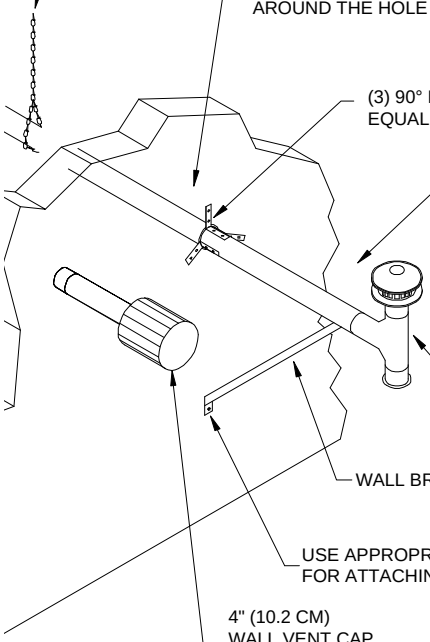

(3) 90° BRACES EQUALLY SPACED

2'-0" (.610 M) MINIMUM CLEARANCE ABOVE OR BEYOND THE HIGHEST STRUCTURE OR SURFACE WITHIN 10'-0" (3.046 M) OF THE VENT

4" (10.2 CM) WALL VENTING KIT ACCESSORY

WALL BRACE

USE APPROPRIATE FASTENER (NOT SUPPLIED) FOR ATTACHING TO BUILDING MATERIAL

4" (10.2 CM) WALL VENT CAP ALTERNATE ACCESSORY

DO NOT PINCH THE HANGER BETWEEN THE FLANGES!

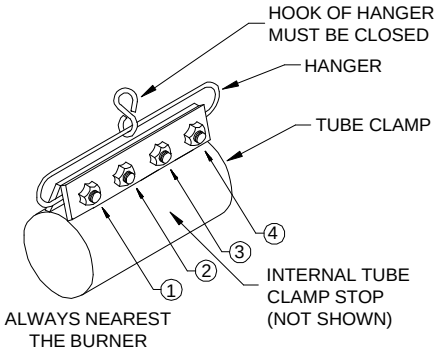

TIGHTEN NUTS A HALF TURN AT A TIME, IN A 2,3,4,1 SEQUENCE UNTIL THE FLANGES OF THE CLAMP TOUCH AND 65 FT-LBS. (88 NM) IS ACHIEVED AT EACH NUT TO ASSURE PROPER SEATING OF THE CLAMPS INNER SLEEVE.

TUBE CLAMP

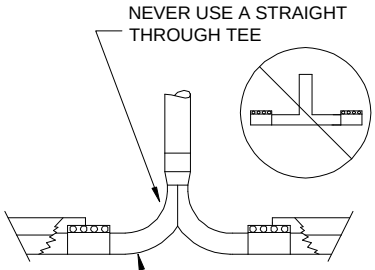

OPTIONAL COMMON VENTING THROUGH ROOF OR WALL

BOTH HEATERS MUST BE CONTROLLED BY A SINGLE THERMOSTAT

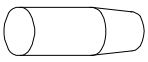

4" (10.2 CM) VENT PIPE ADAPTOR (FACTORY ACCESSORY)

CAUTION

- The first twenty (20) feet (6.1 m) of radiant tube extending from the burner MUST be installed straight.
- There is one exception. A U-Tube heater may have a 180-degree U-bend interposed AFTER the first ten (10) feet (3.0 m).
- Electrical wiring diagrams can be found in the ELECTRICAL SUPPLY AND THERMOSTATIC CONTROL section.

COMBUSTION AIR SUPPLY

GENERAL NOTES

- Uncontaminated atmospheric air for combustion may come from either outdoors or indoors (from within the building).
- Installation of combustion air supply must comply with the instructions, drawings, and installation notes provided in this section.

OUTDOOR AIR SUPPLY

- Uncontaminated atmospheric air for combustion may come from either outdoors or indoors (from within the building).
- Installation of combustion air supply must comply with the instructions, drawings, and installation notes provided in this section.
- In buildings contaminated with excessive dust or dirt, or containing substances which when combined with flame and exhaust products result in corrosive gasses or those under a negative pressure, or high humidity areas, combustion air must come from outdoors.
- Outdoor air supply may be accomplished by bringing in air through piping from either the roof or wall as the drawings illustrate.
- When combustion air is supplied from outdoors, the heater must also be vented to the outdoors (**EXCEPT** high humidity environments consult factory).
- The roof venting cap used for inlet air cap (roof), inlet air wall cap or inlet air box (wall) must be located at least three (3) feet (.91 m) away from any vent termination and in a manner to prevent blockage by snow.
- Components supplied by others must be identical to those specified in this manual and be Metalbestos brand, or equal, for the roof vent cap; and Simpson Dura-Vent, or equal, for the wall vent cap. **NO SUBSTITUTIONS**.
- Single wall 4” (10.2 cm) I.D., 26-gauge (.044 cm) minimum stainless or galvanized sheet metal pipe or schedule 40 PVC is recommended for combustion air supply piping.
- It may be desirable to insulate piping with 1 inch (2.54 cm) of pipe insulation to eliminate condensation from warm inside air.
- DO NOT use collapsible material for combustion air supply, as it will restrict the proper amount of combustion air from being supplied to the burner.
- An optional blower enclosure extends the burner housing to enclose the blower. The outdoor air piping is then attached to the enclosure, isolating the outside of the blower and motor from contaminants.

INDOOR AIR SUPPLY

- When combustion air is to be taken from inside a tightly closed building, an opening to the outdoors must be installed to supply the burner with sufficient air for combustion.
- For every 4,000 BTUH (1.17 kW) input of the total input of **ALL** gas-fired equipment, one (1) square inch (6.45 cm^2) or more of free area opening must be provided.
- The openings should be located above the heaters to reduce the effect of drafts.
- Do not draw combustion air into the heater from attic space or another tightly closed room. There is no guarantee adequate air will be supplied

MAXIMUM LENGTH OF AIR SUPPLY PIPE

40 to 125 MBTUH (12 – 37 kW)	**35** linear ft. (10.7 m)*
130 to 200 MBTUH (38 – 59 kW)	**40** linear ft. (12.2 m)*

*Each 90 degree elbow inserted in the venting system is equivalent to 10 linear ft. (3.0 m).
*Each 45 degree elbow inserted in the venting system is equivalent to 5 linear ft. (1.5 m).
A maximum of **two** 90 degree elbows or their equivalent are allowed (e.g. one 90 degree elbow plus two 45 degree elbows; or four 45 degree elbows, etc.)

OUTDOOR AIR SUPPLY THRU-THE-ROOF

ROOF VENTING CAP USED FOR INLET AIR MUST BE 6 IN. (15 CM) HIGHER THAN SHOW DEPTH.

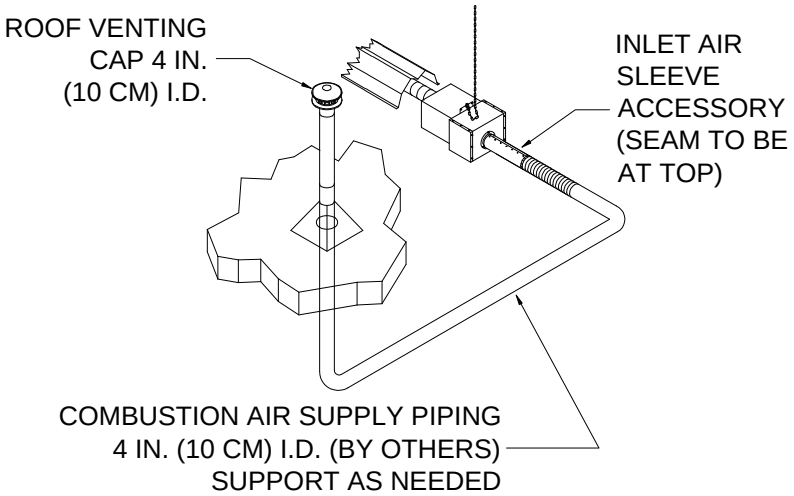

OUTDOOR AIR SUPPLY THRU-THE-WALL

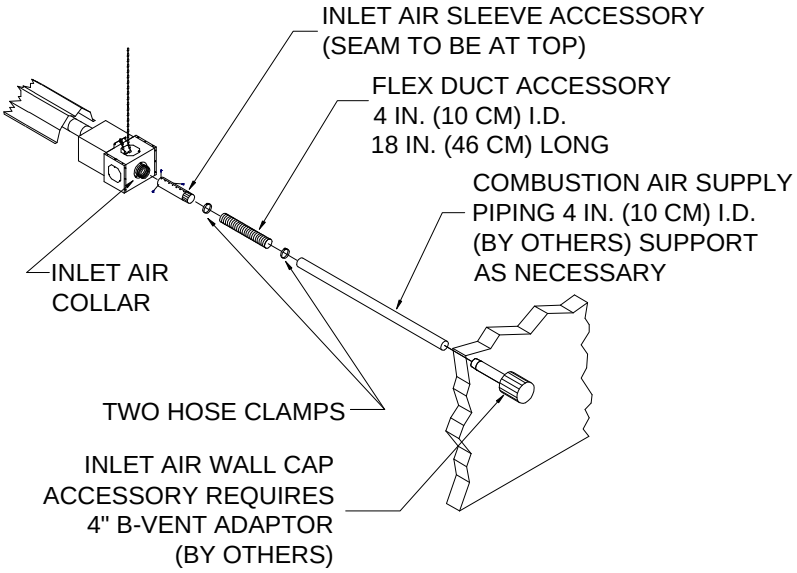

EXHAUST VENTING

OUTDOOR EXHAUST VENTING

- A heater operating with positive vent static pressure and a vent gas temperature that avoids excessive condensate production in the vent is classified as a Category III Vented Appliance.
- This heater may be vented through the roof or wall singularly or in conjunction with no more than one other heater with a single thermostat. To vent more than two heaters together consult the factory.
- Use 4-in. (10.2 cm) I.D. single wall stainless or galvanized sheet metal pipe of not less than 26 ga. (.044 cm) thickness (or other factory approved materials). Place pipe seam at the top.
- Use RTV silicone adhesive sealant liberally at all vent pipe joints.
- Use three (3) #6 sheet metal screws per vent pipe joint – 120° apart starting at the top.
- Recommend 1-inch (2.5 cm) thick pipe insulation wrapped around single wall sheet metal vent pipe.
- By code, the use of dual wall pipe for outdoor venting is limited to appliances with neutral or negative pressures. Local authorities may waive this provision since the heaters are approved for indoor venting with proper exhaust and leakage due to condensation being greatly reduced.
- Be certain to get approval for either type of vent piping from local authorities.
- Vent pipes must be well supported due to the extra stress that occurs during expansion of the unit when operating.
- Vent caps must be identical to, or equal to, the Metalbestos brand for roof venting or Simpson Dura-Vent brand for wall venting. This is critical to the heater's operation and to maintain CSA certification. **NO SUBSTITUTIONS**.
- Do not vent heater between buildings less than 10 feet (3.0 m) apart or above public walkways, doors or windows.

IMPORTANT

- Systems with clamped tubes suspended by clamps may use an optional steel Vent Pipe Connector to avoid crushing sheet metal venting material.

MAXIMUM LENGTH OF EXHAUST VENT PIPE

40 to 125 MBTUH (12 – 37 kW)	**35** linear ft. (10.7 m)*
130 to 200 MBTUH (38 – 59 kW)	**40** linear ft. (12.2 m)*

*Each 90 degree elbow inserted in the venting system is equivalent to 10 linear ft. (3.0 m).
*Each 45 degree elbow inserted in the venting system is equivalent to 5 linear ft. (1.5 m).
A maximum of **two** 90 degree elbows or their equivalent are allowed (e.g. one 90 degree elbow plus two 45 degree elbows; or four 45 degree elbows, etc.)

DISTANCES OF OUTDOOR EXHAUST VENT FROM:

	BELOW Inches (cm)	HORIZONTAL Inches (cm)	ABOVE Inches (cm)
Door	na	48 (122)	na
Window	48 (122)	12 (30)	na
Gravity Air Inlet	na	na	12 (30)
Forced Air Inlet Within 10 ft. (3.0 m)	na	na	36 (91)
Grade	na	na	12 (30)
Gas & Electric Meters, Regulators & Relief Valves	na	48 (122)	na

VENTING THROUGH THE ROOF OR WALL

ROOF VENTING CAP MUST BE 6 IN. (15 CM) HIGHER THAN SNOW DEPTH.

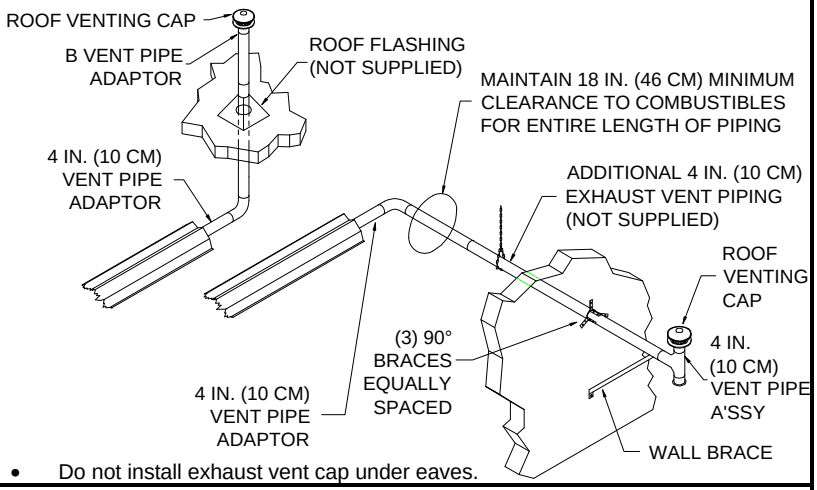

- Do not install exhaust vent cap under eaves.

UNVENTED (INDOOR VENTING)

- Where unvented infrared heaters are used, natural or mechanical means shall be provided to supply and exhaust at least [4 CFM per 1,000 BTUH] 4 ft^3/min/1000 Btu/hr (.38 m^3 /min/kW) input of installed heaters. (ANSI 2223.1/NFPA 54.)
- In Canada see CANADIAN CODES section.
- Exhaust openings for removing flue products shall be above the level of the heaters.
- Where all combustion air is provided by a mechanical air supply system, the combustion air shall be supplied from outdoors at the minimum rate of 0.35 ft^3/min per 100 Btu/hr (0.034 m^3/min per kW) for all appliances located within the space.
- Where exhaust fans are installed, additional air shall be provided to replace the exhausted air.
- Each appliance served shall be interlocked to the mechanical air supply system to prevent main burner operation where the mechanical air supply system is not in operation.
- Combustion air must not be provided directly from outdoors to the burner. For exceptions see COMBUSTION AIR SUPPLY section.

UNVENTED (INDOOR VENTING) CLEARANCES

- **CLEARANCE TO COMBUSTIBLES (CTC)** must be maintained from exhaust end of heater.

RATING

MBTUH (kW)	CTC*
40 to 60 (12 - 18)	10" (25 cm)
65 to 100 (19 - 29)	30" (76 cm)
105 to 125 (31 - 37)	38" (97 cm)
130 to 150 (38 - 44)	48" (122 cm)
155 to 175 (45 - 51)	58" (147 cm)
180 to 200 (53 - 59)	68" (173 cm)

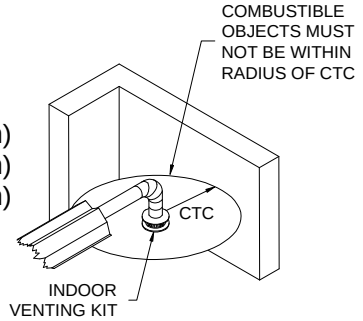

***CTC** is measured from the end of the Indoor Venting Kit.

- Minimum clearance from ceiling: 15" (38 cm) is measured from top of reflector.

ELECTRICAL SUPPLY AND THERMOSTATIC CONTROL

ELECTRICAL SUPPLY

- Voltage: 120 VAC – 1 phase – 60 Hz.
- Maximum Amps: 3.0 (1.33 actual full load amps).
- Flame safety: Electronic.
- Ignition: Direct Spark.
- Wiring must conform to the latest edition of the National Electric Code (ANSI/NFPA 70) or local code legally authorized.
- Have a qualified electrician check that the electrical supply circuit and wall receptacle are properly grounded and that the electrical supply polarity is correct. The heater control is polarity sensitive and will not operate properly if the electrical supply is not wired correctly.
- Electrical power takeoff must be connected to a separately fused circuit with a disconnect, and must be properly polarized and grounded to the heaters power cord.
- Do not run wiring over the heaters or in direct view of radiant heat.
- If any of the wiring supplied must be replaced use type 16 AWG (1.0mm^2), or equivalent with 2/64" (.08cm) insulation and a minimum insulation temperature of 302°F (150°C).

GENERAL INSTALLATION NOTES

- Locate the thermostat as specified in the heating plan.
- If it is not in the heating plan, follow the instructions provided with the thermostat.
- If instructions are not provided with the thermostat, locate it four to five feet above the floor where it will not be directly affected by the heat from the heater, outside drafts, or the sun.
- A location that best represents the average temperature of the room is the most desirable.
- If two heaters are installed on a common exhaust vent they must be controlled by the same thermostat.

CAUTION – 24VAC THERMOSTAT

DO NOT try to connect more than three burners to a 24 VAC thermostat. The transformer relay is rated to operate only three heaters safely. Failure to do so may cause serious bodily harm or property damage.

ACCESSORY THERMOSTATS

Thermostat	Volts AC	Amps	Maximum Number of Heaters
132026-4	120	22.0	7
132486	120	16.0	5
132700	24	.15-1.0	3*

* When installing these heaters to any thermostat, the installer should allow for 3 amps per heater as the blower tends to use more electricity than its rating during its start-up period. This is why all of the 24 VAC thermostats must be connected to a 120 VAC transformer relay, which will safely support only three heaters.

120 VAC THERMOSTATIC CONTROL

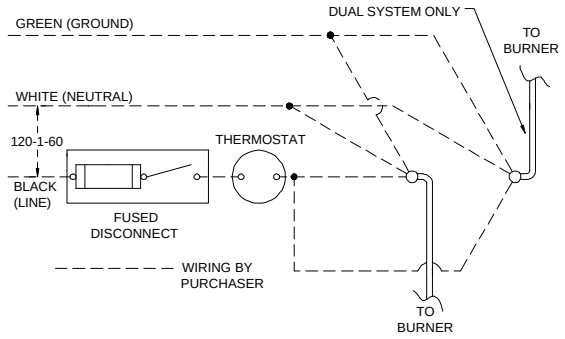

HEATERS IN SERIES WITH A 120 VAC THERMOSTAT

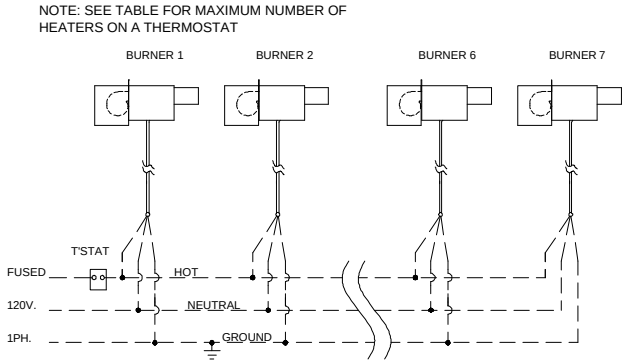

24 VAC THERMOSTAT AND TRANSFORMER (MAX. 3 HEATERS)

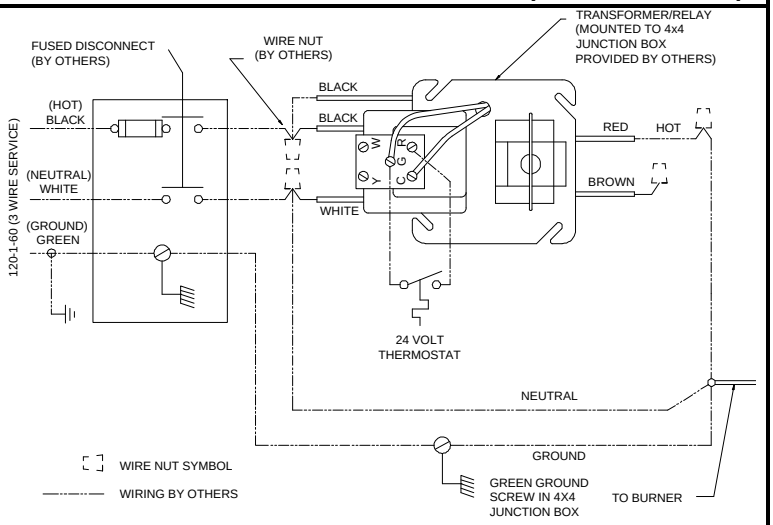

HEATERS IN SERIES WITH A 24 VAC THERMOSTAT

NOTE: BROWN WIRE IS NOT USED BUT MAY BE ELECTRICALLY HOT.
PROTECT PERSONNEL AND THE CIRCUIT BY SCREWING ON A WIRE NUT

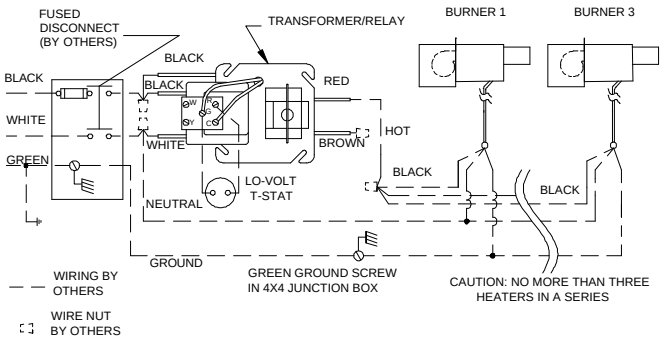

Note: The brown wire is not used, but may be electrically hot. Protect personnel and the circuit by screwing on a wire nut.

OPERATION AND SHUTDOWN

SEQUENCE OF OPERATION

- Thermostat calls for heat.
- 120 VAC is applied to the blower and validation light PL-1 indicates power is ON.
- Air flow switch closes contacts after it senses an increase in air pressure due to fan reaching operational speed.
- Validation light PL-2 indicates combustion air supply and exhaust venting backpressure is normal.
- Ignition Detection Control (IDC) is turned on and begins a pre-purge time period.
- A spark is developed at the igniter and the gas valve is opened to the first step of its two step operation.
- Burner ignites and 5 seconds later the gas valve steps up to its operating position. DC electrical current flows from sensing electrode through flame to ground.
- IDC senses flame presence, turns OFF spark, gas continues flowing through valve.
- Validation light PL-3 indicates normal burner operation.
- During first trial-for-ignition period or upon any flame outage at sensing electrode, the IDC responds and begins sparking within 0.8 seconds. A 15-second trial-for-ignition period begins to re-light the burner. If flame is re-established, normal operation resumes. If the burner does not light after first try, the inter-purge sequence is completed between trials to re-light the burner. If the burner fails to light (10DX-117) or after third trial (35-725), IDC will de-energize the valve and go into lockout mode.
- For lockout recovery, reset thermostat below ambient temperature or disconnect electrical power supply for five (5) seconds.
- If the flame does fail during ignition or normal operation, it is detected by the flame sensor rod, and the IDC then closes the gas valve locking out the system until the thermostat is cycled to the OFF position.
- When the thermostat is satisfied, the whole system is de-energized until another call for heat.
- When installing or servicing this heater, wait at least 5 minutes between attempts for ignition.

SHUTDOWN

- To shutdown the heater for **a week or less**, switch off the electrical supply to the heater.
- To shutdown the heater for **more than one week**, switch off the electrical supply to the heater and turn off the gas supply at the gas isolation valve.

WIRING CONNECTION DIAGRAM

If any of the original wire as supplied with the appliance must be replaced, it must be replaced with wiring material having a temperature rating of at least 302°F (150°C) and shall have a minimum size of 16 AWG (1.0mm^2).

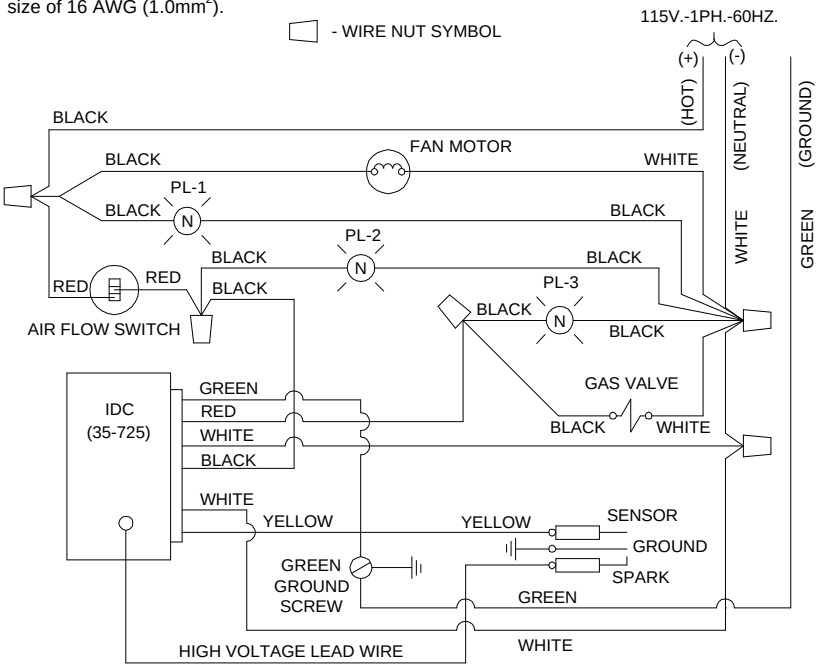

WIRING SCHEMATIC LADDER DIAGRAM

If any of the original wire as supplied with the appliance must be replaced, it must be replaced with wiring material having a temperature rating of at least 302°F (150°C) and shall have a minimum size of 16 AWG (1.0mm^2).

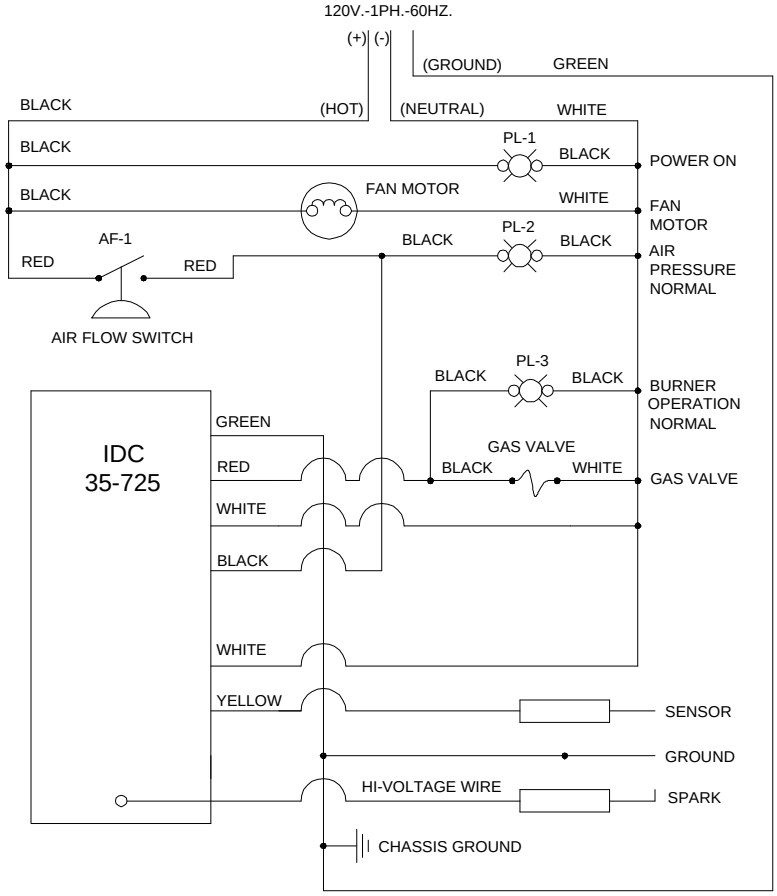

GAS SUPPLY AND GAS PRESSURE

GAS SUPPLY PIPING

- Gas piping must be installed in accordance with local codes and/or the National Fuel Gas Code, ANSI Z223.1 / NFPA 54-latest edition.
- All pipe connections must have pipe joint compound, resistant to LP/propane gas action.
- Piping must have drip leg and a ground joint union.
- Local codes may require shut-off cock ahead of the drip leg.
- Use only agency approved flexible gas connector furnished with heater. See WARNING.
- Use swing or swivel joint in addition to rigid piping if local codes prohibit use of a flexible gas connector.
- Installer provide 1/8" NPT plugged tapping for inlet test point connection immediately upstream of gas connection to heater.
- Isolate regulators, flexible gas connectors, and heaters during high-pressure leak testing.
- All gas lines must be purged of air before startup.

INLET GAS PRESSURE

- Inlet gas pressure must be measured on the inlet side of the valve at the inlet test point (IP). Remove plug from the inlet test point, connect to manometer.
- Inlet gas pressure must conform to the following:

Gas Type	Input MBTUH (kW)	MINIMUM Inlet Pressure inches WC (cm WC)	MAXIMUM Inlet Pressure inches WC (cm WC)
Natural	40 to 125 (12 to 37)	6 (15)	14 (35)
	130 to 200 (38 to 59)	7 (18)	14 (35)
LP/Propane	All	11 (28)	14 (35)

WARNING

- Connector must be installed in a "⊃" configuration. Use only the 24" (61cm) or 36" (91cm) long connector of 1/2" (13 mm) nominal ID that was furnished with the heater.
- Stress from expansion and contraction of heater may cause excessive wear on the gas connection.
- It is important to maintain dimensions on drawing below.

IMPORTANT

- Inlet gas pressure at inlet test point (IP) cannot be more than 14 inches of **Water Column (WC)** (35 cm WC) confirmed by actual field test. (Heater on or off.)
- 14 in. WC ≅ ½ PSI ≅ 35 cm WC ≅ 35 mbar ≅ 3.5 kPa.

HEATER EXPANSION AND GAS CONNECTOR LENGTH

Heaters below require flexible gas connectors of length: 24" (61cm) or 36" (91cm).		Heaters below require flexible gas connectors of length: 36" (91cm).	
Heater Length	**Expansion**	**Heater Length**	**Expansion**
10-20 ft (3.1-6.1 m)	1.1 in (28 mm)	45-50 ft (13.7-15.2 m)	2.1 in (53 mm)
25-30 ft (7.6-9.1 m)	1.5 in (38 mm)	55-60 ft (16.8-18.3 m)	2.4 in (61 mm)
35-40 ft (10.7-12.2 m)	1.8 in (46 mm)	65-70 ft (19.9-21.3)	2.7 in (67 mm)

HIGH INLET PRESSURE

- When inlet gas pressure is greater than 14 in. WC (35 cm WC) a positive lockout type high-pressure regulator must be installed in the gas line ahead of the heater.
- High-pressure regulators will ***NOT*** turn off the flow of gas.
- Always check local codes for gas venting requirements for high-pressure regulators.
- An over-pressure protection device (OPD) may be required in certain jurisdictions.

GAS PRESSURE MEASUREMENTS

- Use only water or red oil manometer to make measurements – NOT A DIAL GAUGE.
- Make **ALL** measurements and adjustments when this heater and **ALL** other gas burning equipment connected to the same gas meter are operating at maximum capacity.

MANIFOLD GAS PRESSURE

- Set inlet pressure first. Fluctuations in inlet pressure can alter manifold pressure.
- See drawing below for manifold pressure adjustment locations.
- Loosen set screw, or remove plug from manifold test point (MP); connect to manometer.
- Remove the slotted cap screw covering the manifold adjustment.
- Turn adjustment screw clockwise to increase pressure or counterclockwise to decrease pressure. Screw may require a flat head screwdriver or a 3/32" (2.38mm) hex key.

Input: MBTUH (kW)	Manifold Pressure
40 to 100 (12 to 29)	3.5 in. WC (8.9 cm WC) Nat./LP
105 to 200 (31 to 59)	5.0 in. WC (12.7 cm WC) Nat./LP

GAS CONNECTOR – CORRECT POSITIONS

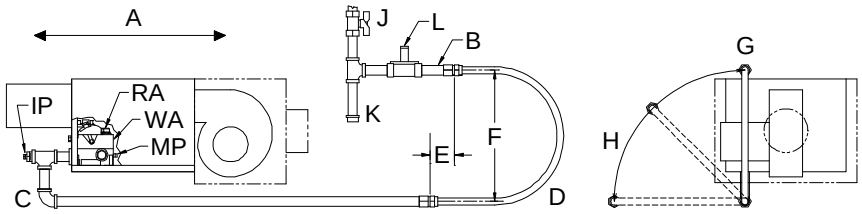

GAS CONNECTOR – INCORRECT POSITIONS

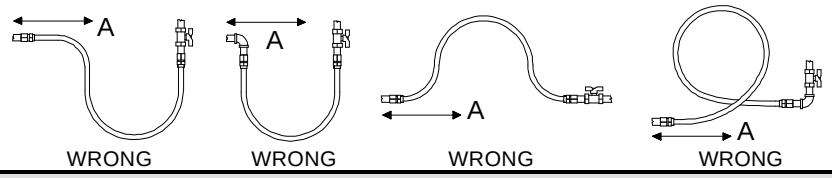

Item	Description
A	Heater movement
B	Gas supply nipple must be parallel to heater movement
C	Hard piping
D	Flexible gas connector
E	3" (7.62 cm) maximum displacement
F	12" (30 cm)
G	Vertical (as shown at left) – end view
H	Alternate positions okay – end view
J	Gas cock shut-off (by others)
K	Drip leg
L	Regulator required when pressure exceeds 14" (35 cm) WC (by others)
IP	Installer provide inlet test point
MP	Manifold test point
RA	Robert Shaw or Sit valve manifold pressure adjustment
WA	White Rodgers valve manifold pressure adjustment

CAUTION

Excessive torque on the burner gas inlet pipe or manifold may cause damage to burner. Always use two (2) wrenches when making pipe connections. Check for leaks with non-corrosive gas leak detection fluid. DO NOT USE FLAMES! Thoroughly rinse with clean water to remove leak detection fluid.

STARTUP

STARTUP PROCEDURES

- **CAUTION: Verify electrical supply is shut off before removing burner cover. Verify gas supply is shut off before removing gas pipe plugs and connecting manometers to measure gas pressures.**
- **IMPORTANT**: Check serial plate for requirements and factory settings. Check and, if necessary, adjust the inlet gas pressure BEFORE checking the manifold gas pressure. Then adjust the manifold gas pressure, if necessary.
- Remove the burner cover by removing the 4 sheet metal screws from the topside of the burner cover.
- Remove the 1/8 NPT pipe plug from the inlet test point (IP) and connect manometer. See the GAS SUPPLY AND GAS PRESSURE section.
- Loosen, Do Not Remove, the set-screw, or remove the 1/8 NPT pipe plug from the manifold test point (MP) on the gas valve (break the tamper seal) and connect manometer. See the GAS SUPPLY AND GAS PRESSURE section.
- Some models have a shutoff dial on the gas valve. Depress the dial on the gas valve, and make sure the gas valve is in the ON position.
- Turn on the electrical and gas supply and set the thermostat above the ambient room temperature, to call for heat.
- Measure the inlet gas pressure and the manifold gas pressure.
- For proper sequence of operation see the OPERATION AND SHUTDOWN section.
- If heater does not operate normally, see the TROUBLESHOOTING section.
- Once startup testing is complete, turn off electrical and gas supply, remove the manometer connections and replace the 1/8 NPT pipe plugs or tighten the set-screws into the inlet and manifold test points. Turn on electrical and gas supply and check again for gas leaks. See the GAS SUPPLY AND GAS PRESSURE section.
- Cycle the heater several times by means of the thermostat, allowing at least five minutes between cycles. If the heater operates normally, replace the burner cover and screws.
- If the heater is vented directly outdoors, observe and verify the flue gases exiting from the exhaust vent are not impinging on building materials or equipment. See the EXHAUST VENTING section.

SPARK IGNITOR

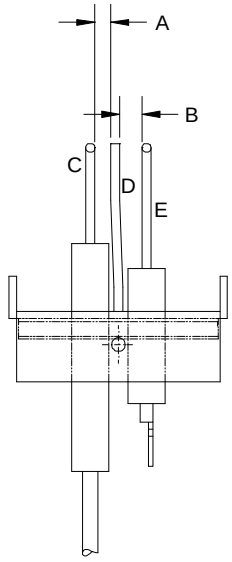

Item	Description
A	Spark gap 5/32” (.156”) (4.0 mm) +/- 1/32” (.031”) (.8 mm)
B	Sensor gap .208” (5.3 mm) reference
C	Spark electrode
D	Ground prong
E	Flame sensor

BURNER DIAGRAM

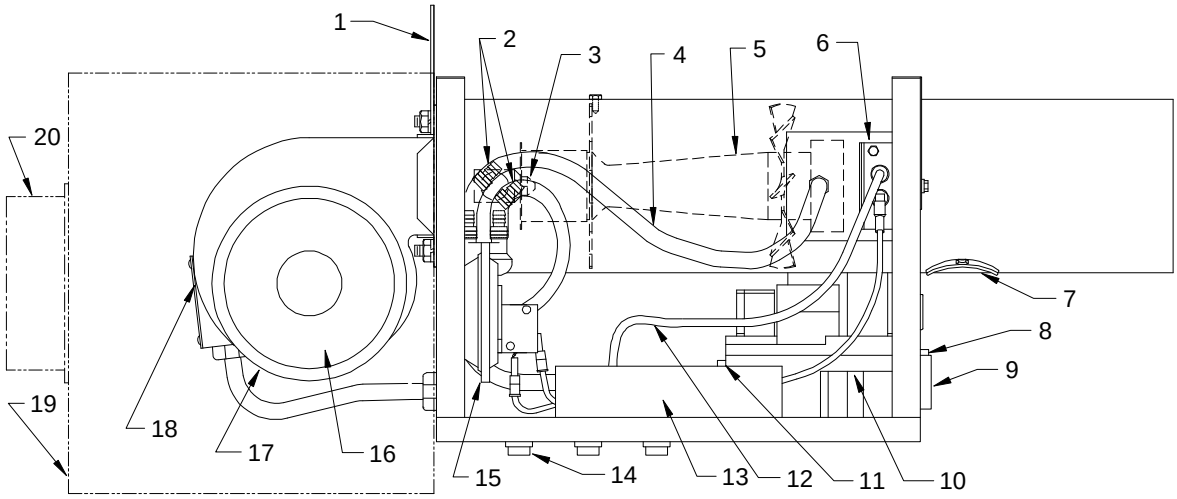

Item	Description	Item	Description	Item	Description
1	Safety chain bracket	8	Inlet test point (IP)	15	Air flow switch
2	Tubing adapters	9	Gas inlet ½“ NPT	16	Air orifice plate
3	Main orifice	10	Gas valve	17	Inlet air collar accessory
4	Vinyl tubing	11	Manifold test point (MP)	18	Blower
5	Burner core assembly	12	Ignition lead wire	19	Blower motor enclosure accessory
6	Ignitor bracket	13	Ignition detection control (IDC)		
7	Observation port	14	Validation lights	20	Inlet air collar accessory

AIR FLOW SWITCH TUBING CONNECTIONS

- The switch “P1” or “+” or “HIGH” side tube goes toward the blower side.
- The switch “P2” or “–” or “LOW” side tube goes toward the ignitor side.

MAINTENANCE

- **FOR SAFETY REASONS, *BEFORE* PERFORMING ANY MAINTENANCE, DISCONNECT AND LOCKOUT THE ELECTRICAL SUPPLY, INCLUDING THE THERMOSTAT, BY POSITIVE MEANS.**
- All maintenance and/or repair ***MUST*** be performed by someone trained and qualified to work on gas and electrical equipment.
- Annual maintenance done prior to the beginning of each heating season is all that is usually necessary.
- In dirty, dusty, or wet atmospheres, it may be necessary to examine and perform needed maintenance at additional times during the heating season. Experience will dictate the frequency.
- Radiant tubes, combustion air ducting, and exhaust venting should be inspected to make sure that: suspension points are secure, tube clamp nuts are tight, heater is level, chains are plumb and taut (except for burner safety chain), vent pipe joints are properly sealed, "S" hooks are crimped closed, there is no excessive exterior buildup of dust or dirt, and make sure there are no restrictions such as bird or insect nests in the combustion air or vent piping or their terminations.
- Reflectors should be inspected to make sure they are clean and secure, as detailed in the INSTALLATION section. If dirty, reflectors should be removed and washed with isopropyl alcohol, Simple Green, or buffed with mild rubbing compound.
- On U-tube systems, the U-bend reflector support nuts should be inspected to make sure they are tight.
- Inspect the inside of the blower housing for excessive dust or dirt buildup on the impeller wheel and make sure the air orifice and the inlet air collar are properly attached. Check that the blower can come up to full speed.
- Remove the cover by removing the 4 sheet metal screws on top of the cover.
- Remove the ignitor by removing **ONLY** the end where the vinyl tubing is attached to the ignitor bracket; the fitting to which the vinyl tubing was connected; the ignition lead wire from the ignition detection control; and the sheet metal screw holding the ignitor bracket to the burner housing wall.
- Remove the ignitor carefully; its' electrodes make a ninety degree turn to the right.
- Clean the ignitor's porcelain insulation and check for cracks and proper gaps (see STARTUP section).
- Within the interior of the burner tube, examine the burner nozzle, primary air holes, main orifice and surrounding area for build up of dust or dirt. Clean if necessary.
- Reinstall the ignitor by following the previous instructions in reverse order.
- Examine the ignition detection control for overheating (warped plastic housing, discoloration, etc.)
- A visual inspection of gas valve, airflow switch, and wiring is adequate.
- Inside each clear vinyl tube used for air flow sensing is a small snubber (aluminum cylinder piece). Visually inspect for cleanliness.
- Clean any surfaces needed and correct any situations found in disrepair.
- Replace the cover and sheet metal screws.
- The blower motor is of the permanently lubricated type and requires no additional lubrication.
- Double check that the area under the heater is kept clear and free from combustible materials, gasoline, and other flammable vapors and liquids.
- Reconnect electrical supply and cycle the heater several times using the thermostat allowing five (5) minutes between cycles for proper operation.
- **WARNING: Do not operate heater with any part bypassed, with any part failed or in any possible situation that may compromise safety. Personal injury, death, and/or property damage could result.**

TROUBLESHOOTING

- Check for symptoms and possible causes in the order presented from the top of this chart to the bottom.
- The symptoms and possible causes are in a logical progressive order as in a flow chart.

SYMPTOM	POSSIBLE CAUSE	CORRECTIVE ACTION
New installation.	1. Heaters not isolated during high pressure leak testing.	1. Replace combination gas valves on each heater.
	2. All gas lines not completely bled of air.	2. Disconnect flex hose at each heater until gas is present. Connect flex hose and leak test.
	3. Gas supply regulator reversed.	3. Remove and install properly.
	4. Electrical supply line voltage & neutral polarity reversed.	4. Correct electrical supply polarity.
Gas odor.	1. Gas pipe joints loose.	1. Check joints with soap solution, tighten as needed.
Blower / PL-1 light does not come on when system energized.	1. Power supply fuse defective.	1. Replace fuse.
	2. 115 VAC not reaching heater.	2. Check thermostat and wiring and fix.
	3. Blower defective.	3. Replace blower.
Pressure switch does not close / PL-2 light does not come on.	1. Inlet or exhaust piping not the proper size and length. (Refer to manual.)	1. Replace piping as required.
	2. Inlet or exhaust termination fittings not to factory specifications.	2. Replace fittings as required.
	3. Inlet or exhaust blocked.	3. Clear blockage.
	4. Airflow tubing or snubber orifice blocked in one or both tubes.	4. Clear blockage.
	5. Blower wheel dirty or damaged.	5. Clean or repair wheel.
	6. Airflow pressure switch defective.	6. Replace airflow pressure switch.
Ignitor does not spark / PL-3 light does not come on.	1. 115 VAC not reaching the Ignition Detection Control (IDC) due to loose wire or connector.	1. Repair loose wire or connector.
	2. High-voltage wire loose or damaged.	2. Secure high-voltage wire or replace ignitor.
	3. Ignition Detection Control (IDC) defective.	3. Replace IDC box.
Burner does not ignite. (There are three trials-for-ignition before the IDC goes into lockout).	1. Gas supply not turned on.	1. Open all manual gas supply valves.
	2. Ignitor not sparking at the tips.	2. Measure spark gap and adjust gap as necessary to 5/32" [0.156" (3.96mm)].
	3. Ignitor not sparking at correct gap.	3. Replace ignitor.
	4. Gas inlet pressure not correct. (See serial plate). Gas inlet piping not sized correctly.	4. Replace inlet gas piping with correct size pipe.
	5. Gas inlet pressure not correct. (See serial plate). Gas supply regulator not set correctly.	5. Adjust gas supply regulator to set inlet pressure to proper level. (See serial plate).
	6. Gas supply regulator sticking.	6. Replace gas supply regulator.
	7. Combination gas valve not in the ON position.	7. Turn combination gas valve to the ON position.
	8. Ignition Detection Control (IDC) not sending 115VAC to combination gas valve.	8. Replace IDC box.
	9. Combination gas valve defective.	9. Replace combination gas valve.
	10. Combination gas valve outlet (manifold) pressure not correct. (See serial plate).	10. Adjust combination gas valve regulator to set inlet (manifold) pressure to proper level.
	11. Main or sub gas orifice blocked by spider web, etc.	11. Clear blockage.
	12. Gas orifice(s) or air orifice size not correct.	12. Install correct size gas orifice(s) or air orifice.
Spark does not stop when the burner ignites.	1. Power supply not grounded to a true earth ground.	1. Install a true earth ground to the power supply.
	2. Flame sensor wire loose or damaged.	2. Secure flame sensor wire or replace wire harness to IDC box.
	3. Flame signal not at least -17 VDC.	3. Check gas inlet and manifold pressures compared to the possible causes in the previous symptom where the burner does not ignite.
	4. Ignition Detection Control (IDC) is defective.	4. Replace IDC box.
Burner does not stay lit until the thermostat is satisfied.	1. Flame sensor wire is loose or damaged.	1. Replace wire harness to IDC box.
	2. Ground connection to IDC loose.	2. Tighten ground connection to IDC.
	3. Electrical supply line voltage & neutral polarity reversed.	3. Correct electrical supply polarity.
	4. Inlet or exhaust partially blocked.	4. Clear blockage.
	5. Airflow pressure switch erratic or defective.	5. Consult factory or replace airflow pressure switch.
	6. Flame signal not at least -17 VDC.	6. Check gas inlet and manifold pressures compared to the possible causes in the previous symptom where the burner does not ignite.
	7. Ignition Detection Control (IDC) defective.	7. Replace IDC box.
Heater will not turn off.	1. Thermostat defective.	1. Replace thermostat.

REPLACEMENT PARTS

! WARNING !

Any substitutions of factory-installed parts without prior written permission may result in unsafe operation, property damage, personal injury, death, voids CSA design certification, and manufacturer's warranty.

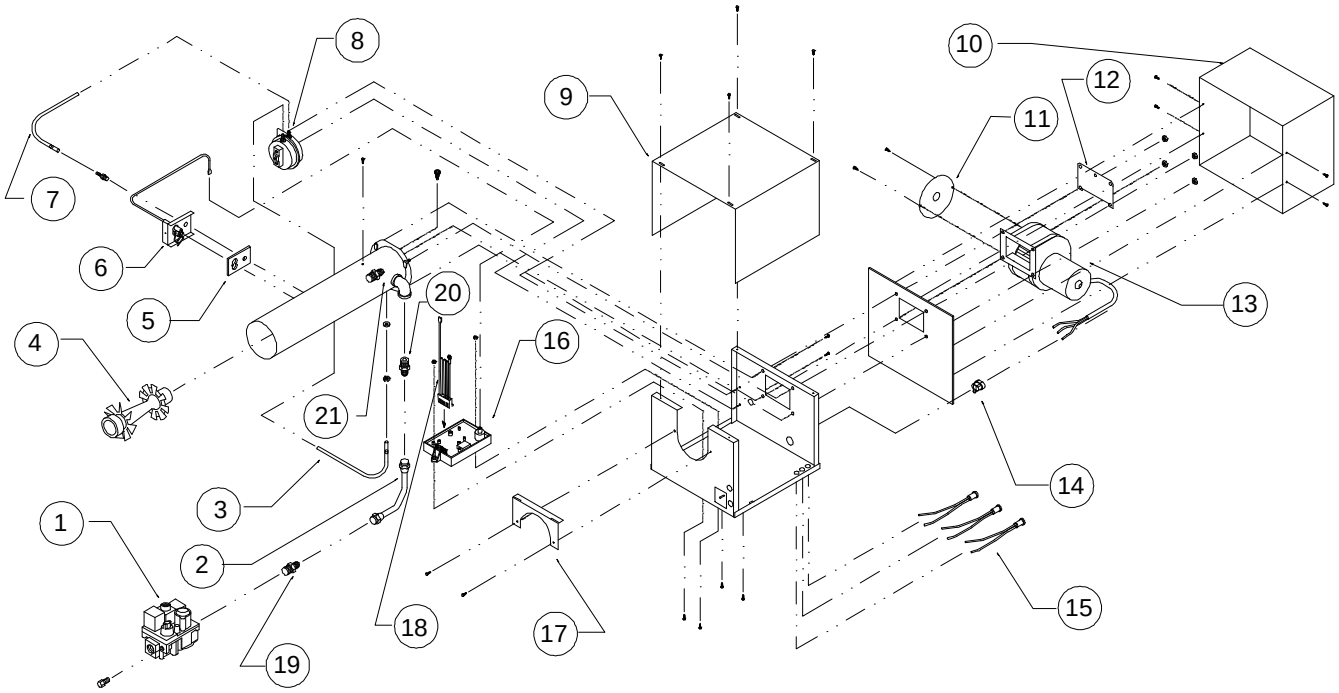

1. Gas valve	12. Safety chain bracket with nuts
2. Gas manifold assembly with flare nuts	13. Blower motor
3. Air flow switch (combustion) tubing assembly with snubber and fittings	14. Strain relief bushing
4. Burner core	15. System validation light
5. Ignitor gasket	16. Ignition detection control (IDC)
6. Ignitor	17. Burner tube holding bracket with screws
7. Air flow switch (exhaust) tubing assembly with snubber and fittings	18. Wire harness assembly
8. Air flow switch	19. Gas manifold fitting (at valve)
9. Burner cover	20. Gas sub orifice
10. Blower motor enclosure	21. Gas main orifice (located inside of burner tube)
11. Air orifice plate	

Due to continuous product improvement, please provide serial and model number prior to ordering replacement parts to assure safe repairs and maintenance.

WINDY CONDITION NOTES

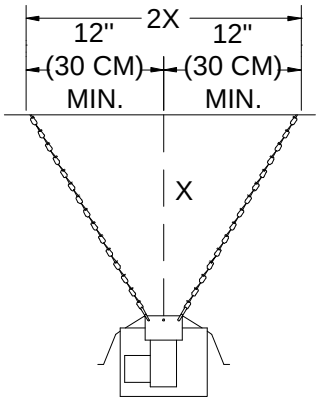

BURNER
SECOND CHAIN
CONFIGURATION

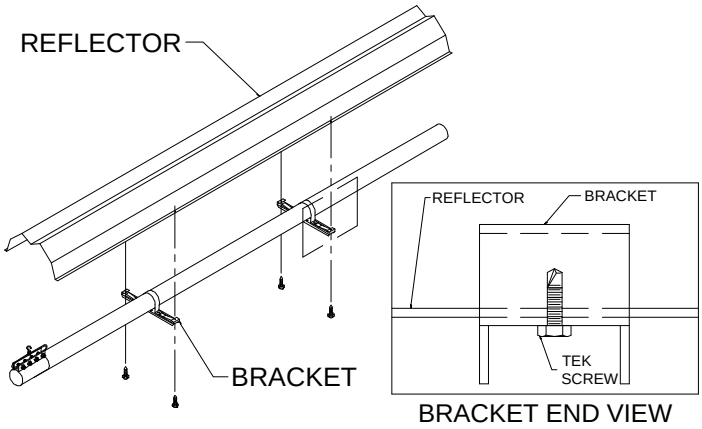

BRACKET END VIEW

NEAR LOADING DOCK, AIRPLANE HANGAR DOORS, OR OTHER WINDY AREAS FASTEN THE REFLECTORS TO THE REFLECTOR SUPPORT BRACKETS WITH TEK SCREWS OR OTHER POSITIVE MEANS.

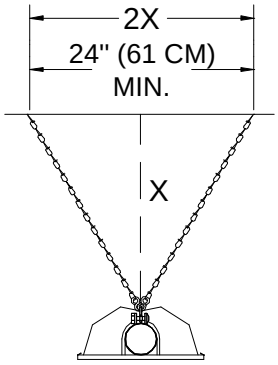

STRAIGHT OR 'L' TYPE
SECOND CHAIN
CONFIGURATION

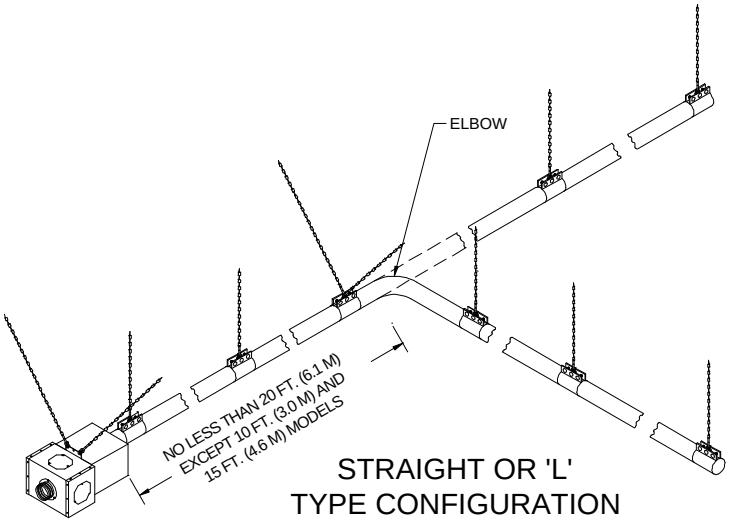

STRAIGHT OR 'L'
TYPE CONFIGURATION

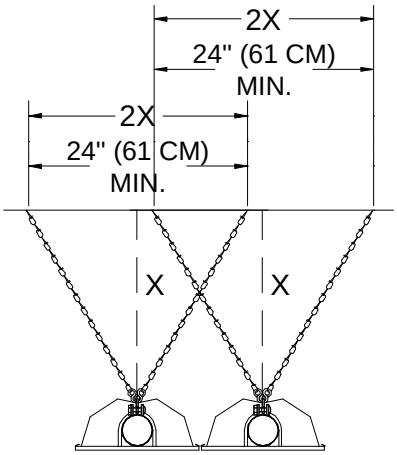

'U'-TUBE
SECOND CHAIN
CONFIGURATION

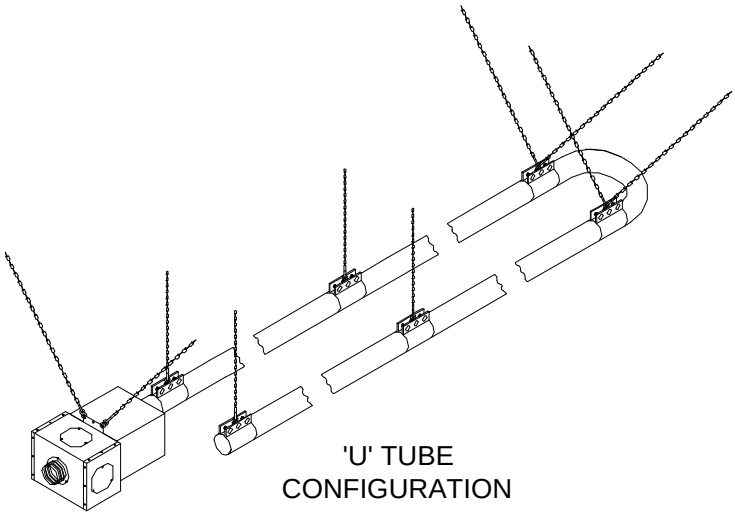

'U' TUBE
CONFIGURATION

U-TUBE INSTALLATION

- A heater may be installed as a U-Tube with its radiant tubes horizontal or with the heat exchanger angled above the combustion chamber as illustrated by the drawing below.
- When radiant tubes are horizontal, reflectors may be individually rotated from 0 to 30 degrees or from 0 to 45 degrees depending on the model installed. (Refer to CLEARANCE TO COMBUSTIBLES section).

HORIZONTAL

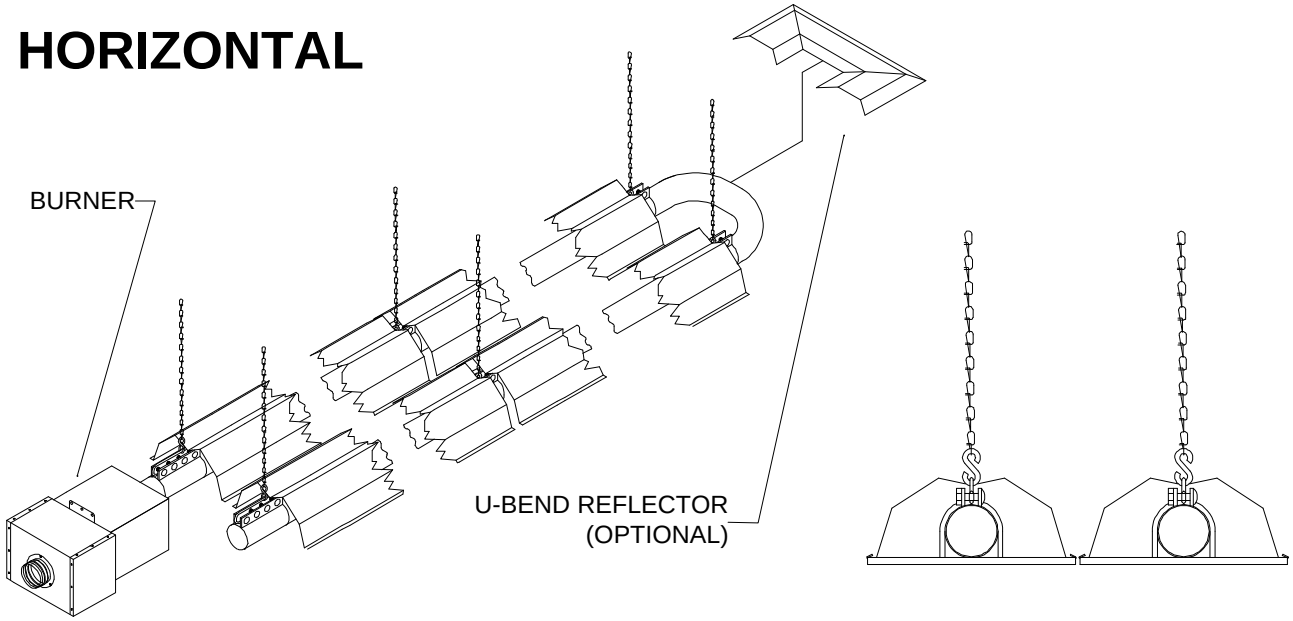

ANGLED

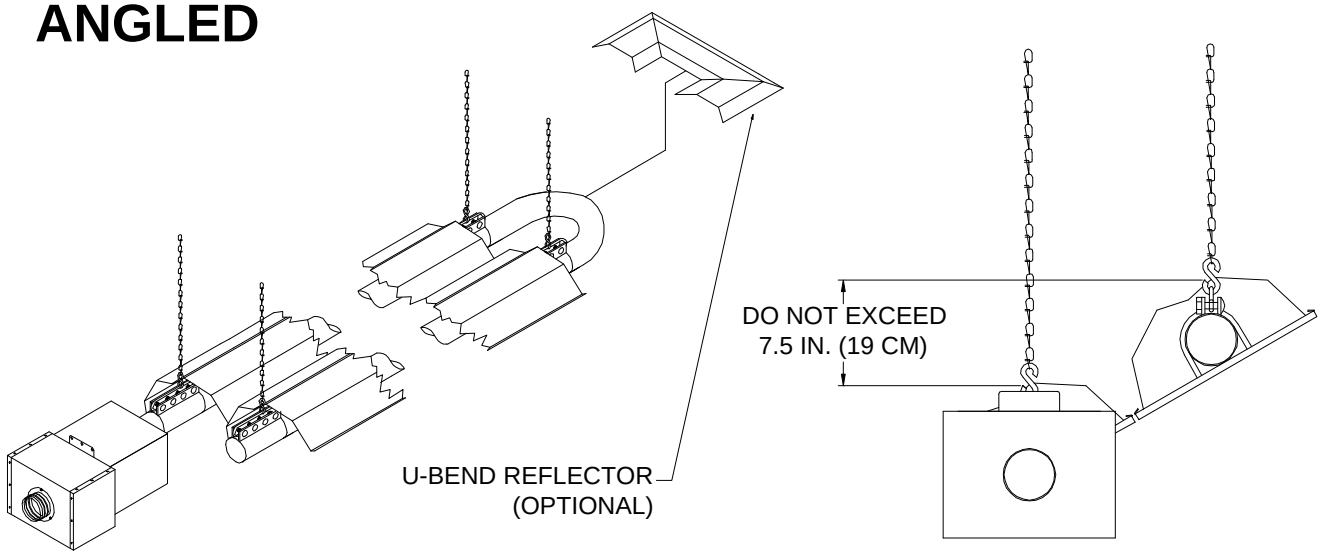

HEATER CONFIGURATIONS

- Tube heaters can be arranged in many configurations; some common ones are illustrated below. It is important to limit the number of bends since each bend slows the movement of air inside the tube, resulting in decreased efficiency.
- The **first twenty feet** (6.1 m) of radiant tube extending from the burner must be installed **straight** [**EXCEPTION**: a 15-foot (4.6 m) or 20-foot (6.1 m) heater may have a 180° U-bend interposed after the first 10 feet (3.0 m)].
- Each system can use a maximum of **two (2)** 16 gauge (.17 cm) stainless steel or aluminized steel 90° elbows, **OR one (1)** 16 gauge (.17 cm) stainless steel or aluminized steel 180° U-bend. Elbows and U-bends can not be used **simultaneously** in the same system.
- All tube sections of a unit must be mounted on the same horizontal plane. For exceptions or other configurations, consult factory.
- Special reflectors are available: 90° elbow reflector, 180° U-bend reflector, side extension reflector and inverted V-deflectors. Contact factory for more information.
- Use factory accessory elbows and U-bends only.

180° U-BEND

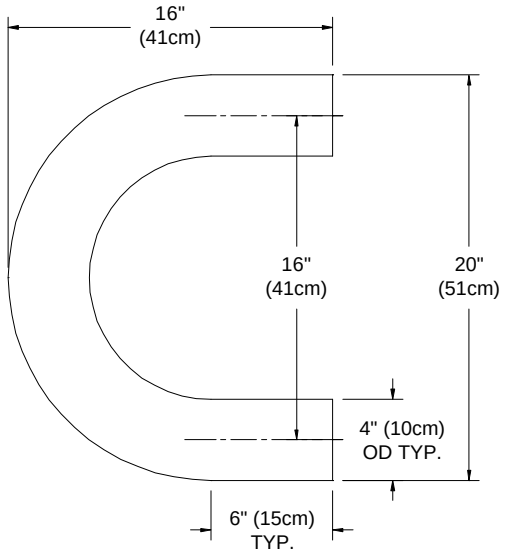

90° ELBOW

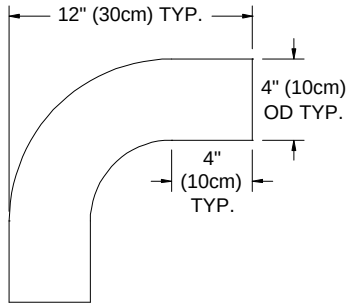

CONFIGURATION DIAGRAMS

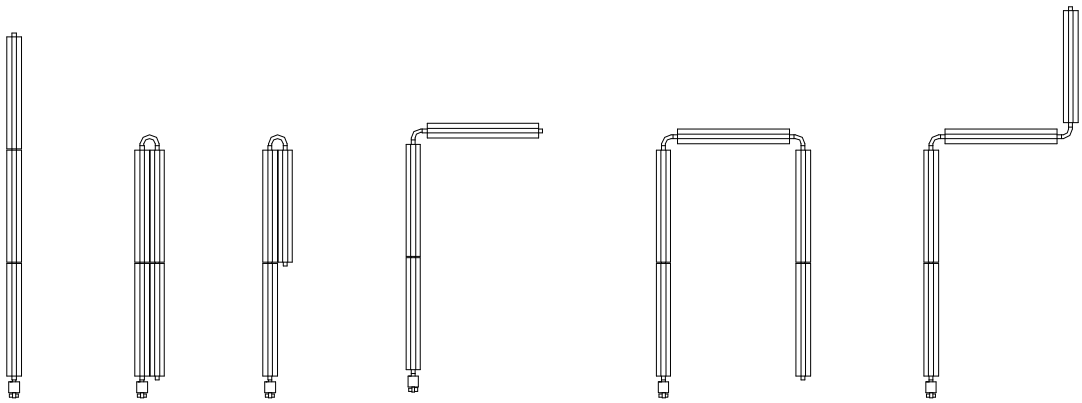

Note: Not all units can utilize every configuration.

THIS PAGE INTENTIONALLY LEFT BLANK

BASIC SYSTEM CONFIGURATIONS

- **<u>Stainless steel tube and reflector</u> components are designated with a "SR" suffix, i.e. "C9SR".**
- **A metal turbulator is always in the <u>LAST</u> 10-foot (3.0m) long tube section.**

- These are the recommended configurations for your heater. Contact the factory with any questions.
- LEGEND: **L** : LP/Propane gas, **N** : Natural gas, ▸ : Burner, **U** : 180° U-Bend.

STRAIGHT TUBE				***HEATER COMPONENTS***			
Burner Size MBTUH (kW)	**Length feet (m)**	**Series**	**Gas Type**	▸	**Combustion Chamber**	**Heat Exchangers**	**Exhaust End**
40 (12)	10 (3.1)	A	N/L	▸	**C9**	----	----
40 (12)	15 (4.6)	A	N/L	▸	**C9**	----	H6
40 – 60 (12 – 18)	20 (6.1)	A	N/L	▸	**C2**	----	**H1**
65 – 85 (19 – 25)	20 (6.1)	MB	N(L)	▸	**C2**	----	**H9(H1)**
65 – 85 (19 – 25)	25 (7.6)	MB	N(L)	▸	**C2**	**H7**	**H9(H1)**
65 – 100 (19 – 29)	30 (9.1)	B	N(L)	▸	**C2(C3)**	H2	H5
105 – 130 (31 – 38)	30 (9.1)	MC	N - only	▸	**C2**	**H3**	**H1**
65 – 100 (19 – 29)	35 (10.6)	B	N(L)	▸	**C2(C3)**	H2 H6	H5
105 – 130 (31 – 38)	35 (10.6)	MC	N - only	▸	**C2**	**H3 H7**	**H1**
65 – 100 (19 – 29)	40 (12.2)	B	N(L)	▸	**C2(C3)**	H2 H2	H5
105 – 120 (31 – 35)	40 (12.2)	B	N/L	▸	**C2**	H2 H2	H5
125 (37)	40 (12.2)	B	N - only	▸	**C2**	H2 H2	H5
125 (37)	40 (12.2)	C	L - only	▸	**C2**	H2 H2	H5
130 – 150 (38 – 44)	40 (12.2)	C	N/L	▸	**C2**	H2 H2	H5
100 (29)	45 (13.7)	B	N(L)	▸	**C2(C3)**	H2 H2 H6	H5
105 – 120 (31 – 35)	45 (13.7)	B	N/L	▸	**C2**	H2 H2 H6	H5
125 (37)	45 (13.7)	B	N - only	▸	**C2**	H2 H2 H6	H5
125 (37)	45 (13.7)	C	L - only	▸	**C2**	H2 H2 H6	H5
130 – 150 (38 – 44)	45 (13.7)	C	N/L	▸	**C2**	H2 H2 H6	H5
100 (29)	50 (15.2)	B	N(L)	▸	**C2(C3)**	H2 H2 H2	H5
105 – 120 (31 – 35)	50 (15.2)	B	N/L	▸	**C2**	H2 H2 H6	H5
125 (37)	50 (15.2)	B	N - only	▸	**C2**	H2 H2 H6	H5
125 (37)	50 (15.2)	C	L - only	▸	**C2**	H2 H2 H2	H5
130 – 200 (38 – 59)	50 (15.2)	C	N/L	▸	**C2**	H2 H2 H2	H5
150 – 200 (44 – 59)	55 (16.8)	C	N/L	▸	**C2**	H2 H2 H2 H6	H5
150 – 200 (44 – 59)	60 (18.3)	C	N/L	▸	**C2**	H2 H2 H2 H2	H5
150 – 200 (44 – 59)	65 (19.9)	C	N/L	▸	**C2**	H2 H2 H2 H2 H6	H5
150 – 200 (44 – 59)	70 (21.3)	C	N/L	▸	**C2**	H2 H2 H2 H2 H2	H5

U-TUBE				***HEATER COMPONENTS***			
Burner Size MBTUH (kW)	**Length feet (m)**	**Series**	**Gas Type**	▸	**Combustion Chamber**	**Heat Exchangers**	**Exhaust End**
40 (12)	15 (4.6)	A	N/L	▸	**C9**	U	H6
40 – 60 (12 – 18)	20 (6.1)	A	N/L	▸	**C2**	U	**H1**
65 – 85 (19 – 25)	20 (6.1)	MB	N(L)	▸	**C2**	U	**H9(H1)**
65 – 100 (19 – 29)	30 (9.1)	B	N(L)	▸	**C2(C3)**	H6 U H6	H5
105 – 130 (31 – 38)	30 (9.1)	MC	N - only	▸	**C2**	**H7** U **H7**	**H1**
65 – 100 (19 – 29)	40 (12.2)	B	N(L)	▸	**C2(C3)**	H2 U H2	H5
105 – 120 (31 – 35)	40 (12.2)	B	N/L	▸	**C2**	H2 U H2	H5
125 (37)	40 (12.2)	B	N - only	▸	**C2**	H2 U H2	H5
125 (37)	40 (12.2)	C	L - only	▸	**C2**	H2 U H2	H5
130 – 150 (38 – 44)	40 (12.2)	C	N/L	▸	**C2**	H2 U H2	H5
100 (29)	50 (15.2)	B	N(L)	▸	**C2(C3)**	H2 H6 U H6 H2	H5
105 – 120 (31 – 35)	50 (15.2)	B	N/L	▸	**C2**	H2 H6 U H6 H2	H5
125 (37)	50 (15.2)	B	N - only	▸	**C2**	H2 H6 U H6 H2	H5
125 (37)	50 (15.2)	C	L - only	▸	**C2**	H2 H6 U H6 H2	H5
130 – 200 (38 – 59)	50 (15.2)	C	N/L	▸	**C2**	H2 H6 U H6 H2	H5
150 – 200 (44 – 59)	60 (18.3)	C	N/L	▸	**C2**	H2 H2 U H2 H2	H5
150 – 200 (44 – 59)	70 (21.3)	C	N/L	▸	**C2**	H2 H2 H6 U H6 H2 H2	H5

- NOTE: MC series tubes are all **painted black**.

COMBUSTION CHAMBERS

C9SR

40 MBTUH (10 and 15 ft. units only)
[12 kW (3 and 4.6 m only)]

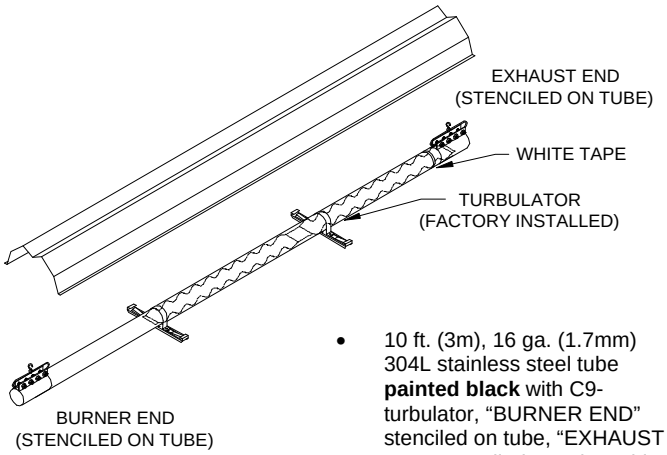

- 10 ft. (3m), 16 ga. (1.7mm) 304L stainless steel tube **painted black** with C9-turbulator, “BURNER END” stenciled on tube, “EXHAUST END” stenciled on tube, white tape at exhaust end
- (2) two stainless steel 304 tube clamps
- 10 ft. (3m) stainless steel 304 reflector
- (2) stainless steel 304 reflector brackets

C2SR

40 thru 60 MBTUH (20 ft. units only)
[12-18 kW (6.1 m only)]
65 thru 85 MBTUH (20 and 25 ft. MB units only) [19-25 kW (6.1 and 7.6 m MB only)]
65 thru 100 MBTUH (30 thru 50 ft. natural gas units) [19-29 kW (9.1 thru 15.2 m natural)]
105 thru 200 MBTUH (30 thru 70 ft. units) [31-59 kW (12.2 thru 21.3 m)]

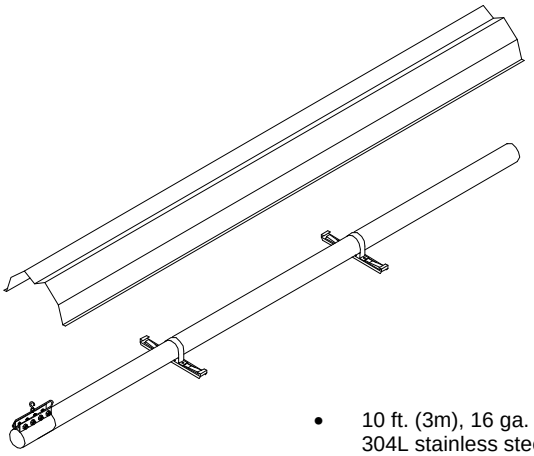

- 10 ft. (3m), 16 ga. (1.7mm) 304L stainless steel tube **painted black**, “BURNER END” stenciled on tube
- stainless steel 304 tube clamp
- 10 ft. (3m) stainless steel 304 reflector
- (2) stainless steel 304 reflector brackets

C3SR

65 thru 100 MBTUH (30 thru 50 ft. propane units) [19-29 kW (9.1 thru 15.2 m propane)]

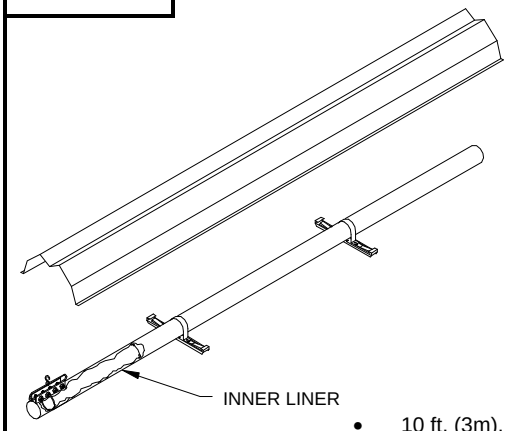

- 10 ft. (3m), 16 ga. (1.7mm) 304L stainless steel tube **painted black** with inner liner, “BURNER END” stenciled on tube
- stainless steel 304 tube clamp
- 10 ft. (3m) stainless steel 304 reflector
- (2) stainless steel 304 reflector brackets

TYPICAL PARTS

10 ft. (3m) stainless steel 304 reflector
[length approx. 119” (302cm)]

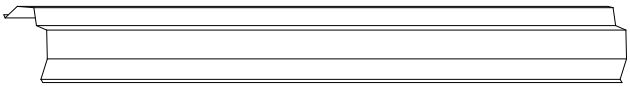

Stainless steel 304
Tube clamp

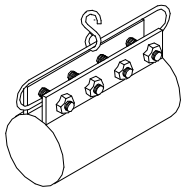

Stainless Steel 304
Reflector bracket

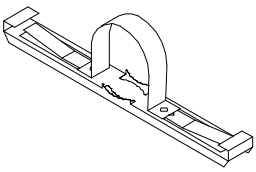

HEAT EXCHANGERS

H2SR (MIDDLE)

65 thru 200 MBTUH (30 thru 70 ft. units except MC units) [19-59 kW (9.1-21.3 m except MC)]

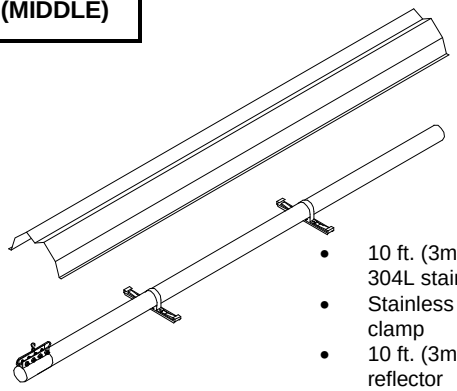

- 10 ft. (3m), 16 ga. (1.7mm) 304L stainless steel tube
- Stainless steel 304 tube clamp
- 10 ft. (3m) stainless steel 304 reflector
- (2) stainless steel 304 reflector brackets

H6SR (MIDDLE)

40 MBTUH (ONLY 15 ft. end tube) [12 kW (ONLY 4.6 m end tube)]
65 thru 200 MBTUH (25 thru 70 ft. units) [19-59 kW (7.6-21.3 m)]

H7SR (MIDDLE)

Painted Black

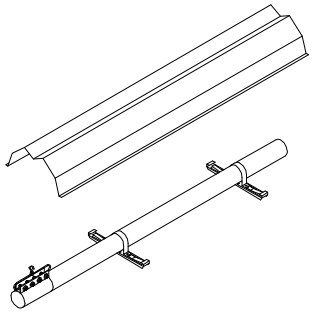

- 5 ft. (1.5m), 16 ga. (1.7mm) 304L stainless steel tube
- Stainless steel 304 tube clamp
- 5 ft. (1.5m) stainless steel 304 reflector
- (2) stainless steel 304 reflector brackets

H3SR (MIDDLE)

105 thru 130 MBTUH (30 thru 35 ft. MC units only) [31-38 kW (9.1-10.7 m MC only)]

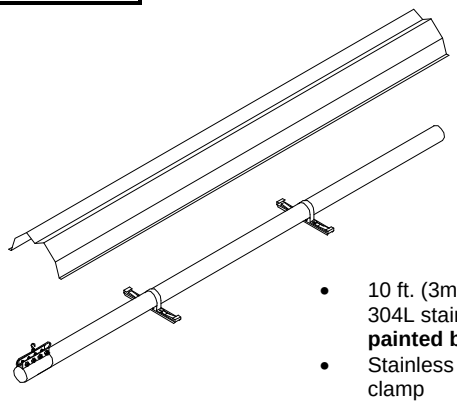

- 10 ft. (3m), 16 ga. (1.7mm) 304L stainless steel tube **painted black**
- Stainless steel 304 tube clamp
- 10 ft. (3m) stainless steel 304 reflector
- (2) stainless steel 304 reflector brackets

H5SR (EXHAUST)

65 thru 200 MBTUH (excluding 20 thru 25 ft. MB units and 30 thru 35 ft. MC units) [19-59 kW (excluding 6.1-7.6 m MB and 9.1-10.7 m MC)]

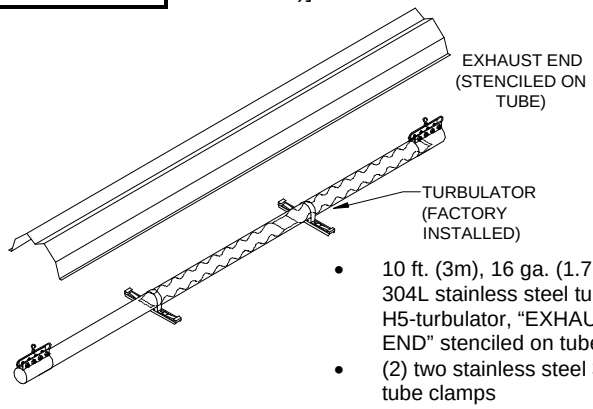

- 10 ft. (3m), 16 ga. (1.7mm) 304L stainless steel tube with H5-turbulator, “EXHAUST END” stenciled on tube
- (2) two stainless steel 304 tube clamps
- 10 ft. (3m) stainless steel 304 reflector
- (2) stainless steel 304 reflector brackets

H9SR (EXHAUST)

65 thru 85 MBTUH (20 thru 25 ft. natural gas MB units) [19-25 kW (6.1 and 7.6m natural MB)]

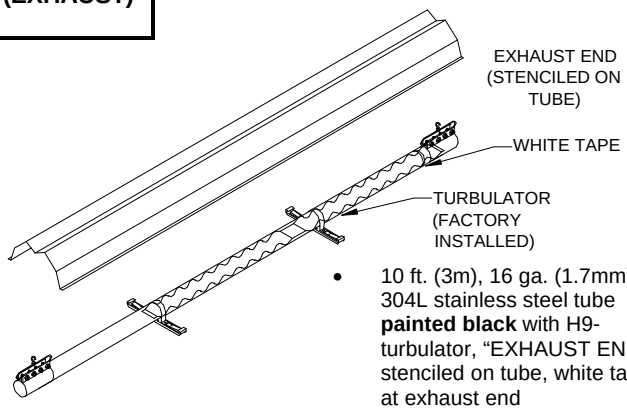

- 10 ft. (3m), 16 ga. (1.7mm) 304L stainless steel tube **painted black** with H9-turbulator, “EXHAUST END” stenciled on tube, white tape at exhaust end
- (2) two stainless steel 304 tube clamps
- 10 ft. (3m) stainless steel 304 reflector
- (2) stainless steel 304 reflector brackets

H1SR (EXHAUST)

40 thru 60 MBTUH (20 ft. units) [12-18 kW (6.1 m)], 65 thru 85 MBTUH (20 thru 25 ft. propane MB units) [19-25 kW (6.1 and 7.6m propane MB)] 105 thru 130 MBTUH (30 thru 35 ft. MC units) [31-38 kW (9.1-10.7 m MC)]

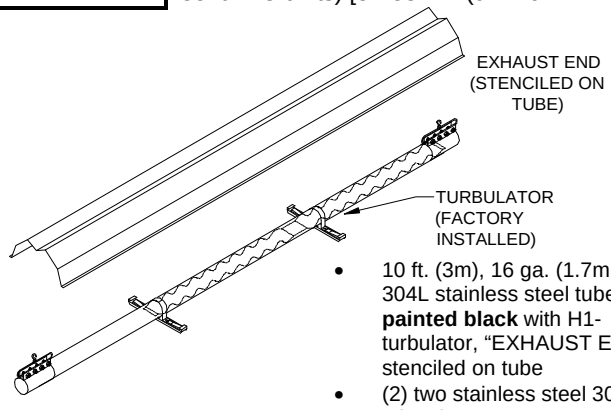

- 10 ft. (3m), 16 ga. (1.7mm) 304L stainless steel tube **painted black** with H1-turbulator, “EXHAUST END” stenciled on tube
- (2) two stainless steel 304 tube clamps
- 10 ft. (3m) stainless steel 304 reflector
- (2) stainless steel 304 reflector brackets

INSTALLATION (1 OF 2)

CAUTION

- **DO NOT** use gas piping or electrical conduit to provide any type of support for the heater's suspension.
- Means of suspension **MUST BE** able to support twice the weight of the heater, securely fastened to the building's structure, and allow for expansion during its operation.
- Chain for suspension **MUST BE** 12 in. (31cm) minimum in length and be 1/0 TENSO with a minimum working load rating of 200 lbs. (90 kg).
- The "S" hook **MUST BE** Chicago Hardware no. 5 or equal and carry a 70 pound (32kg) maximum load.

STEP 1

- To maintain straightness over the length of the system use a taut string in the planning of suspension points. Make true right angles if 90-degree elbows are used.
- Check the BASIC SYSTEM CONFIGURATIONS section for the general orientation of components matching the model number of your system.
- Identify all components in the COMBUSTION CHAMBERS and HEAT EXCHANGERS sections.
- U-type systems use a 180-degree U-bend. See U-TUBE INSTALLATION section.

STEP 2

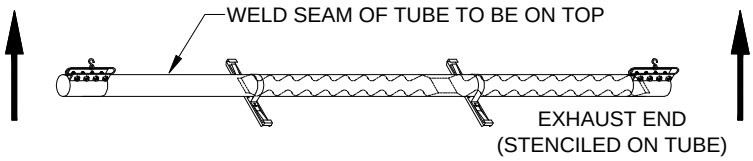

The final heat exchanger in a system has "EXHAUST END" stenciled on the exhaust end and has a metal turbulator factory installed inside the exhaust end. If different model heaters are installed at the same site, ensure the correct exhaust end heat exchanger is used by checking the BASIC SYSTEM CONFIGURATIONS section. Lift into place the exhaust end of the final heat exchanger [or combustion chamber C9SR on a 40 MBTUH 10-foot (12 kW 3.0 m) unit] and suspend it by inserting the S-hook into the loop in the sliding hanger at the top of the tube clamp, crimping it closed, and then inserting the other end of the S-hook into the last chain link, and crimping it closed.

NOTE: Make sure that tube is inserted tight against the center stop inside the tube clamp.

STEP 3

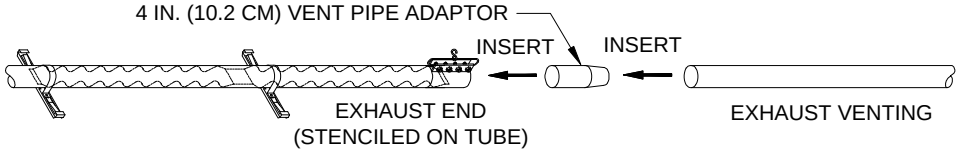

Insert factory accessory 4 in. (10.2 cm) Vent Pipe Adaptor (Connector) into the end of the tube stenciled EXHAUST END. If factory Vent Pipe Adaptor (Connector) is not used as specified in the EXHAUST VENTING section, the installer must reinforce the venting material as the tube clamp may damage it. Finish installing exhaust venting.

STEP 4

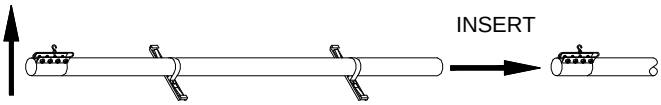

For heaters longer than 25 feet (7.6 m), lift the remaining heat exchanger(s) into place. Suspend the end with a tube clamp by inserting the S-hook into the last link of the previously hung chain and crimp it closed. Insert the end, without the clamp on it, into the tube clamp of the previous heat exchanger. Be certain that the tube is inserted to the stop inside the tube clamp.

STEP 5

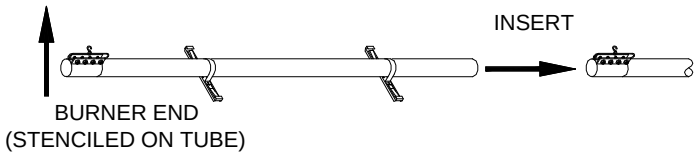

For heaters of 20 feet (6.1 m) or more, lift the correct stainless steel combustion chamber (C2SR or C3SR) into place. Suspend the end of the tube stenciled BURNER END, with a tube clamp, by inserting the S-hook into the last link of the previously hung chain and crimp it closed. Insert the end, without a tube clamp, into the previous heat exchanger. Be certain that the tube is inserted to the center stop in the clamp. Tighten the clamp, sufficiently but not permanently, to make sure it does not come loose during installation.

CAUTION: MB & MC SERIES

- Stainless steel MB and MC series burners are identified with a white paper sign. The MB and MC burners **must be used** with the **H1SR** or the **H9SR (end marked with white tape)** exhaust end heat exchanger. **NO EXCEPTIONS.** Improper operation may result if this is not followed. See BASIC SYSTEM CONFIGURATIONS section

INSTALLATION (2 OF 2)

STEP 6

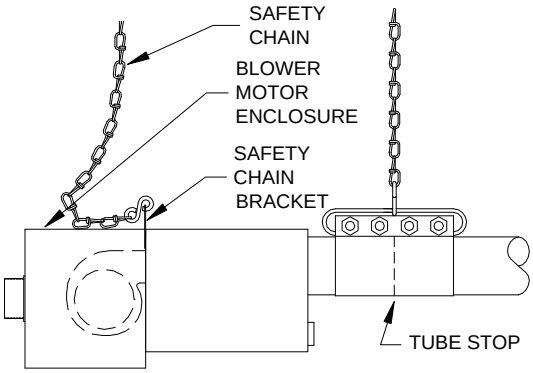

Lift the burner into place and suspend it by inserting the S-hook of the safety chain into the center hole of the safety chain bracket, and then crimp the hook closed. Insert the burner tube into the tube clamp at the burner end of the combustion chamber. Make sure that the burner tube is inserted against the center stop inside of the tube clamp. Then, tighten the clamp as described in step 7.

NOTE: The safety chain for the burner has 6" (15 cm) of slack. It is **NOT** taut.

STEP 7

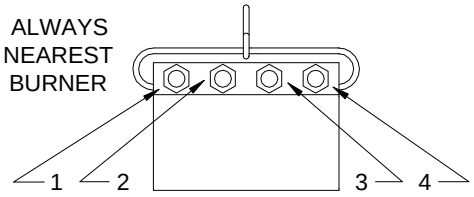

Tighten all tube clamp nuts on all tube clamps. Tighten nuts a half turn at a time, in a 2, 3, 4, 1 sequence, where 1 is always closest to the burner. Tighten nuts with a torque wrench until the flanges of the clamp touch and 65 ft.-lbs. (88 Nm) is achieved at each nut to assure proper seating of the clamps' inner sleeve. Do not pinch clamp hanger between flanges. S-hook of clamp must be closed after inserting chain.

STEP 8

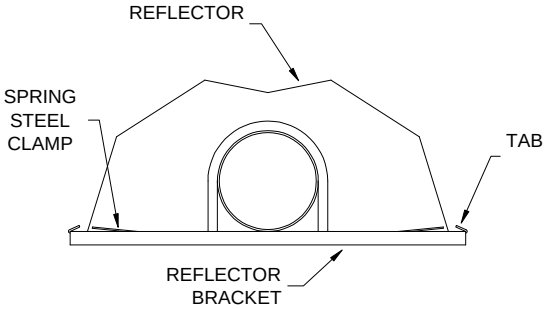

Lift reflectors into place and install on reflector brackets. Make sure not to soil the polished underside of the reflectors. Gloves are suggested. Insert the double turned edge of the reflector under the reflector bracket tab. Be certain the spring steel clamp is in place to hold the reflector securely as shown. If the reflectors are to be at an angle, loosen the two (2) nuts holding the two (2) reflector brackets in place and rotate reflector and brackets into desired position. Reflectors must not be angle mounted more than 30° from horizontal for 65 to 125 MBTUH (19 – 37 kW) or 45° from horizontal for 40 to 60 or 130 to 200 MBTUH (12 – 18 or 38 – 59 kW). **If located near a large doorway or in an area affected by wind see the WINDY CONDITION NOTES section.**

STEP 9

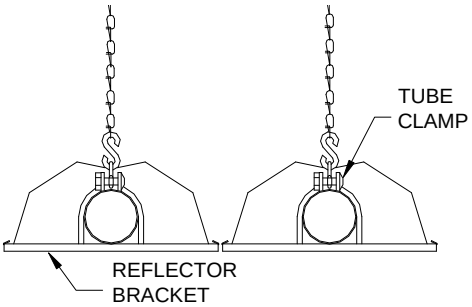

For U-tube construction, see the BASIC SYSTEM CONFIGURATIONS section for placement of the 180° bend. Otherwise, installation procedure is the same as above. See also the U-TUBE INSTALLATION section.

CAUTION	IMPORTANT
• Make sure all chains are plumb and vertical. A chain that is not plumb and vertical may cause damage to the radiant tube it suspends.	• Connect the gas supply as instructed in the GAS SUPPLY AND GAS PRESSURE section. • Connect the electrical supply as instructed in the ELECTRICAL SUPPLY AND THERMOSTATIC CONTROL section.

FOR SERVICE OR REPAIR, FOLLOW THESE STEPS IN ORDER:

FIRST: Record the following information

Model No.: _____

Unit Serial No.: _____

Date of Installation: _____

SECOND: Contact the Installer

Name _____

Address _____

_____

Phone _____

THIRD: Contact the Nearest Distributor

Name _____

Address _____

_____

Phone _____

Daystar

American™
garage door supply inc.

1225 Industrial Park Dr. S.E.
Bemidji, MN 56601

www.americandoorsupply.com
AGDsales@americandoorsupply.com
Toll Free: 1-800-233-1487
Phone: 218-751-5254
Fax: 218-751-6551